THELAL — Dining Table



L x W x H

247 cm x 121 cm x 77 cm

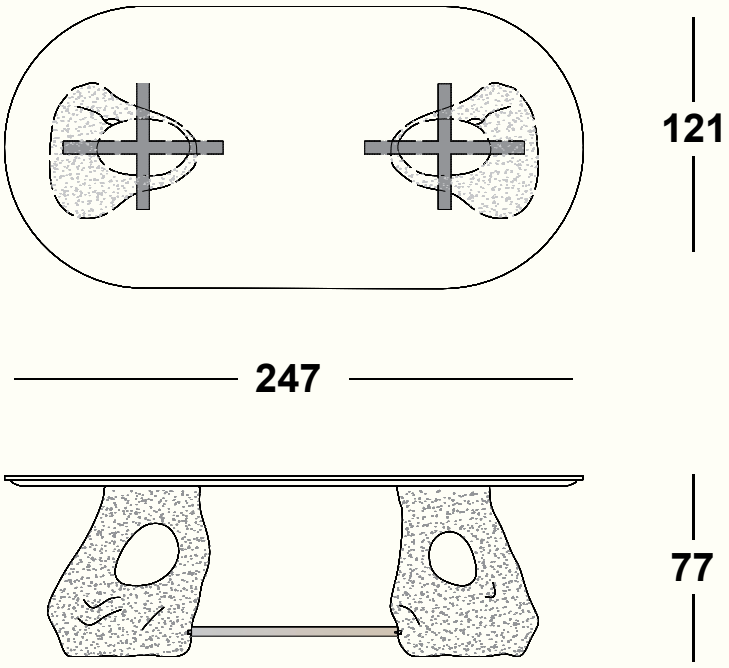

Materials

- Natural finish teak wood for outdoor use.
- Natural finish oak wood for indoor or shaded area use.

Accessories:

- Protective Cover.

Warranty / Maintenence:

- See bymawzin.com for warranty terms & maintenance instructions.

Wood Finish:



Teak Wood | Oak Wood | Black Oak Wood

Stone Finish:



Travertine Stone

Metal Finish:



Brushed Metal

Please note that the characteristics of the wood used to build the product may vary slightly from the material used in any samples or product photography due to the inherent characteristics of the material.

THE-TBL-01