MAWAZIN®
مَوَازِين

RAW FURNITURE LOOKBOOK-2027

WWW.BYMAWAZIN.COM

MAWAZIN®

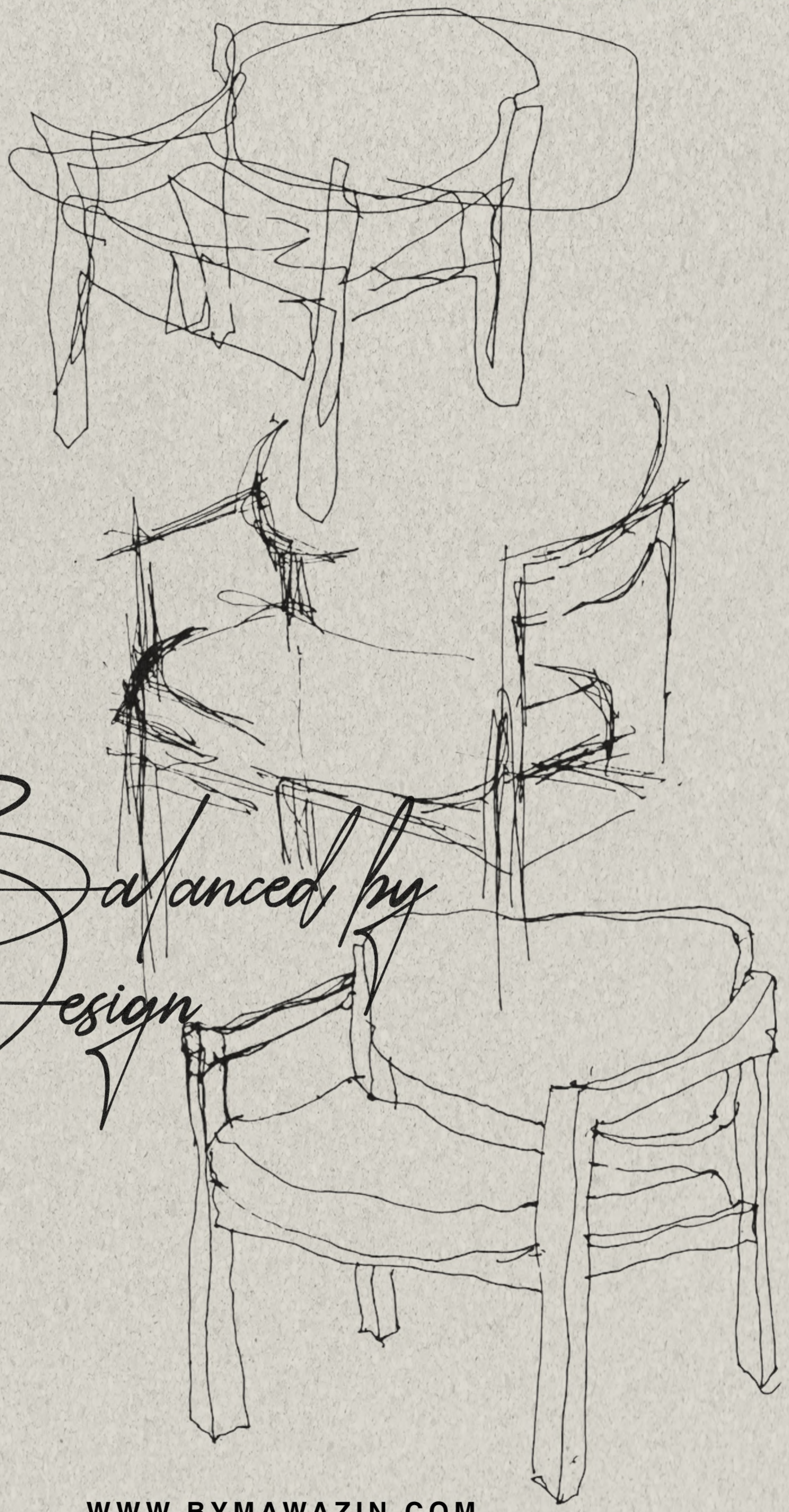

Balanced by Design

Mawazin is not simply outdoor furniture.

It is a study of balance between architecture, material, atmosphere, and human presence.

Rooted in craftsmanship and guided by quiet geometry, the collection explores how outdoor living can feel grounded, refined, and timeless. Each piece is designed with a restrained architectural language solid teak wood, woven rope textures, and carefully balanced proportions that respond naturally to light, shadow, and landscape.

Inspired by raw environments, warm earth tones, and contemporary mediterranean living, mawazin creates spaces that feel calm, tactile, and enduring. The collection embraces simplicity without losing character, allowing materials and form to speak with honesty.

Every detail is intentional.

Every proportion is measured.

Every texture is designed to age beautifully with time.

More than furniture, mawazin is an atmosphere one that brings balance to outdoor living through craftsmanship, material authenticity, and architectural clarity.

EMOTION,

RAWNESS AND

REFINEMENT.

MAWAZIN is a premium outdoor living brand that blends refined design, natural materials, and skilled craftsmanship to create timeless furniture and outdoor experiences.

Inspired by balance, comfort,and connection with nature, Mawazin transforms outdoor spaces into elegant environments designed for meaningful living.

a design-driven outdoor living brand where refined craftsmanship meets the beauty of nature. Rooted in balance, every piece is thoughtfully created to bring harmony between form, material, comfort, and its surrounding environment.




MAWAZIN
موازين
CRAFTED WITH BALANCE

The Brand Nature

- Behind the Name

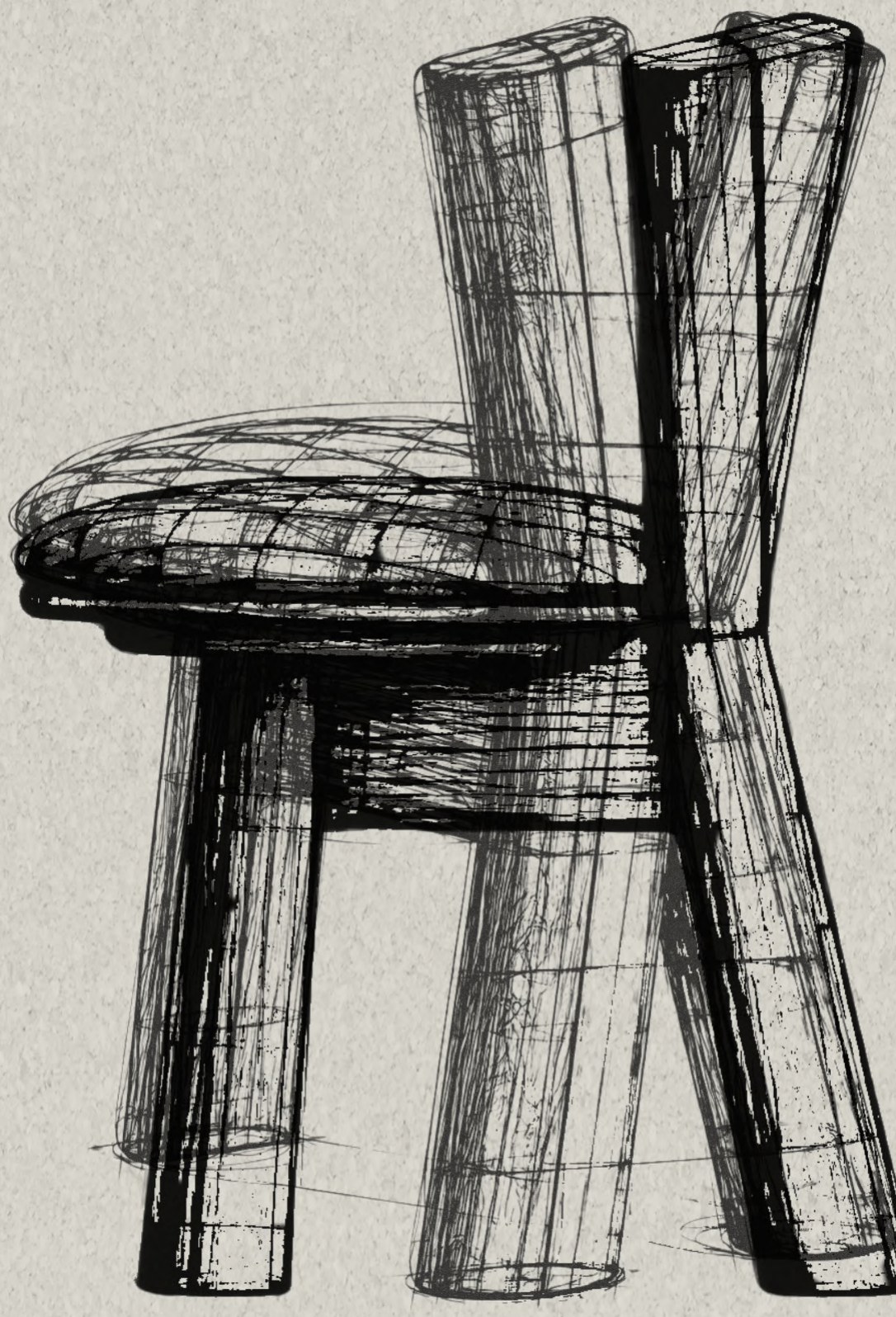

In Every Form We Shape, in Every Line We Draw, and in Every Joint We — There Is Balance.

Mawazin Is Not Just a Name. It Is a Worldview. A Philosophy Born Out of Building Slowly, Precisely, and with Deep Respect for Material, Structure, and Life.

Founded by the Architect **Ahmed El Attar**, Who Has Spent over a Decade Crafting Space and Structure , Mawazin Reflects His Lived

Experience One Foot in Concept, the Other in Construction. With a Workshop Rooted in Alexandria and a Reputation Built Across Egypt and the Gulf, the Maker Behind the Brand Has Spent Years Building Terraces, Cladding Facades, and Designing Large-Scale Outdoor Furniture. But Now, Mawazin Marks a Turning Point — a Return to Essence. To the Grain. To the Object.

Mawazin Is Not Trendy. It Is Not Decorative. It Does Not Follow.

It Balances. It Builds. It Holds.

It Is the Quiet Force Behind Honest Furniture — Designed to Support, Not Perform.

It Celebrates the Act of Making as a Form of Thought.

It Reflects a Lifestyle of Balance Between the Work and the Pause, the Object and the Space, the Individual and the Collective.

CONTENTS

Available at
WWW.BYMAWAZIN .COM



Mawazin is where balance becomes design. Not just symmetry, but precision knowing what to refine, what to release, and how to bring every element into perfect harmony.

NEW
COLLECTION >>



01 .

LOUNGE SETS

03 .

COFFEE TABLES .





02 .

DINING SETS .



04 .

SOFAS & ARM CHAIRS .



05 .

SUNBEDS .

Explore Our Range of Products

01





02



04

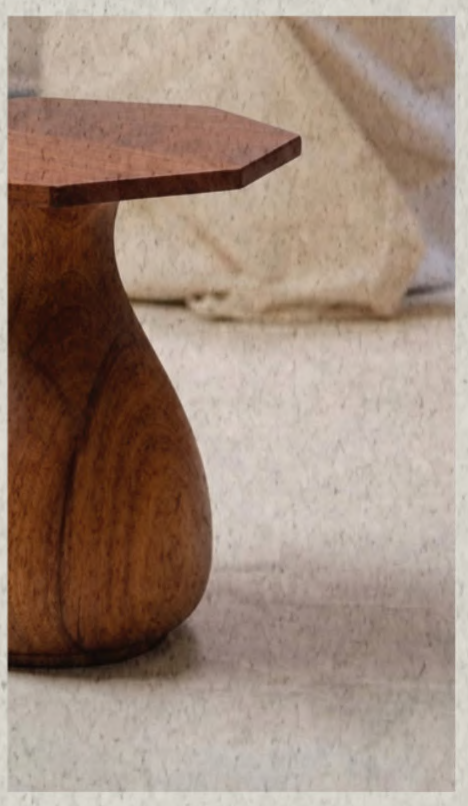

03

Outdoor Furniturelook Book 2027



DISCOVER OUR
NEW COLLECTION

01

NEW COLLECTION

02



NOW AVAILABLE
ONLINE AT
WWW.BYMAWAZIN.COM

03



09



DISCOVER OUR NEW COLLECTION

SIGNATURE . DESIGNS

What We Represent

REPRESENTS OUR ORIGINAL IN-HOUSE FURNITURE DESIGNS,

DEVELOPED FROM CONCEPT TO FINAL FORM BY OUR DESIGN TEAM.

MAWAZIN IS WHERE BALANCE BECOMES DESIGN. NOT JUST SYMMETRY, BUT PRECISION KNOWING WHAT TO REFINE, WHAT TO RELEASE, AND HOW TO BRING EVERY ELEMENT INTO PERFECT HARMONY.




WATAR



WATAR Lounge Set

Is a Bold Interplay of Structure and Texture, Where Precision-Crafted Wood Frames Are Enveloped by a Rhythmic Rope Weave That Defines Both Form and Identity .

Design Charachter:

The Linear Wrapping Creates a Dynamic Visual Screen Simultaneously Solid and Transparent While Subtle Color Accents Introduce Depth and Character.

Comfort & Function:

Anchored by Soft, Generous Cushions, the Design Balances Architectural Rigor with Inviting Comfort .

Outdoor Performance:

Durable , Weather Resistant Materials ,Suitable for Long Term Outdoor Use .

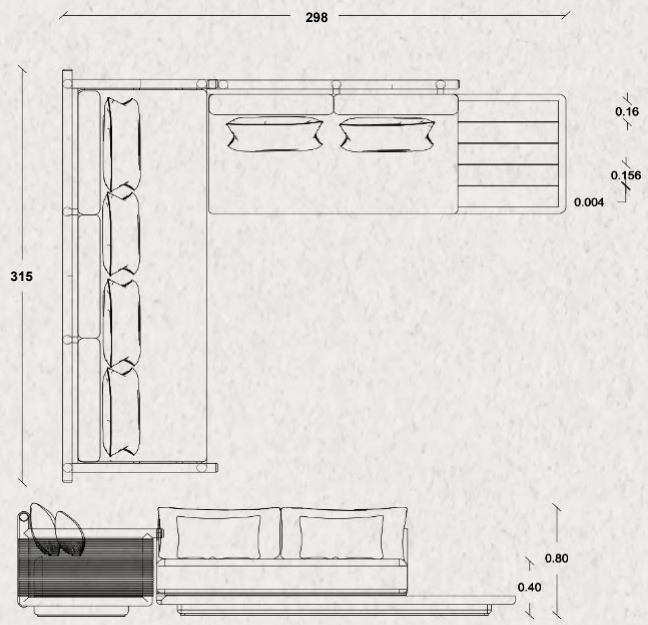

Full Lounge Set

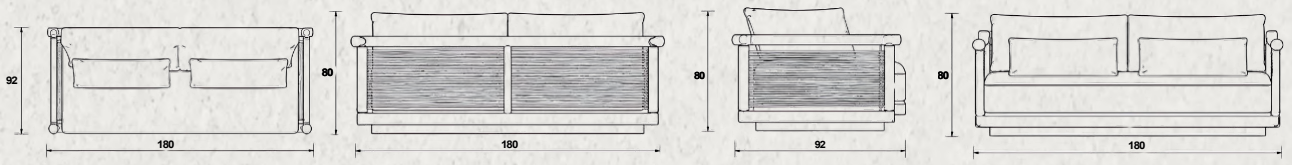

2 Seater Sofa
The depth may vary either 105 cm or 92 cm.

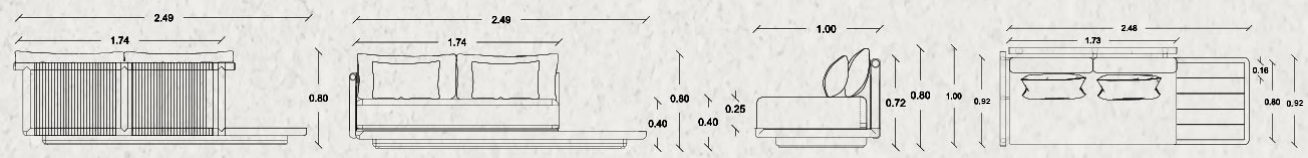

Corner Sofa First Piece
The depth may vary either 105 cm or 92 cm.

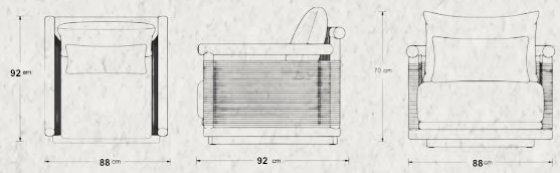

Arm Chair
The depth may vary either 105 cm or 92 cm.

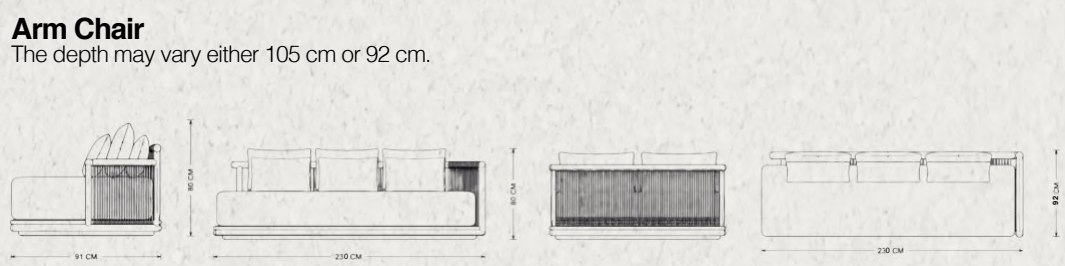

Corner Sofa Second Piece
The depth may vary either 105 cm or 92 cm.

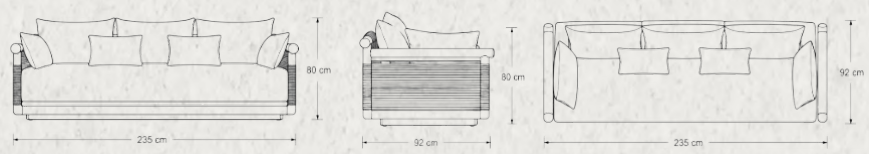

Three Seater Sofa
The depth may vary either 105 cm or 92 cm.

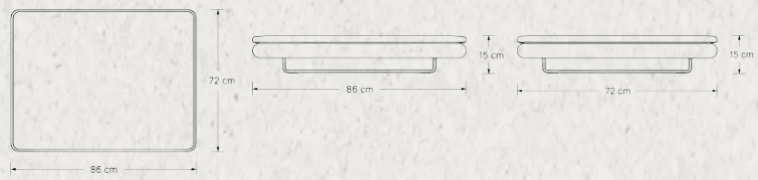

Coffee Table

Designed By :
Cherif Morsi

نسج NASSJ



NASSJ Lounge Set

A refined outdoor lounge set comprising an L-shaped sectional, two matching armchairs, a low coffee table, and three accent tables.

Design Charachter:

The Seating Pairs Rounded Natural Wood Frames with Ivory Cushions and Vivid Woven Cord Panels.

Comfort & Function:

Preserve the Cord's Distinctive Crossing Pattern, Visible Bindings, Cushion Shapes, and the Light, Open Construction of Both Pieces.The Three Solid Wood Tables Have Softly Rounded, Organic Tops and Sculptural Supports.

Outdoor Performance:

Durable , Weather Resistant Materials ,Suitable for Long Term Outdoor Use .

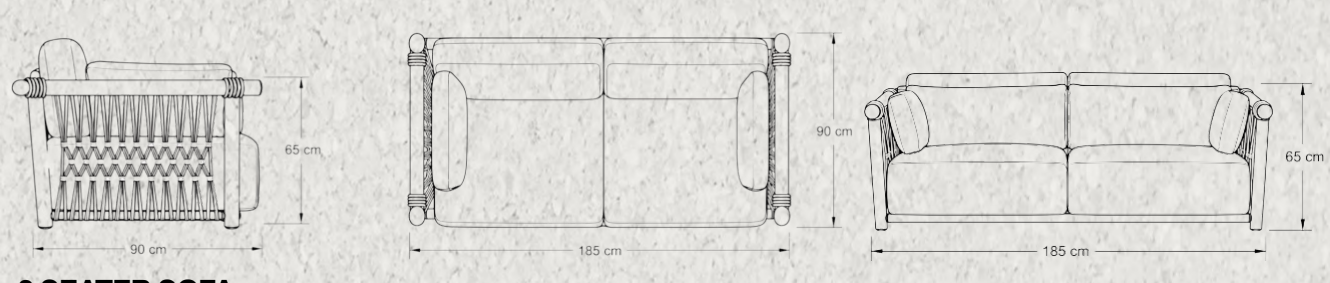

2 SEATER SOFA

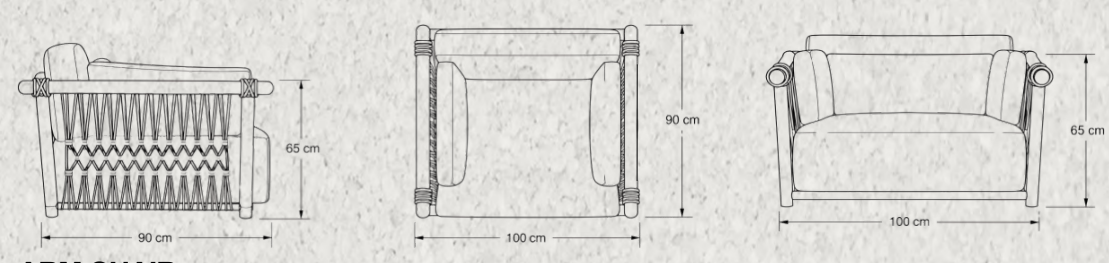

ARM CHAIR

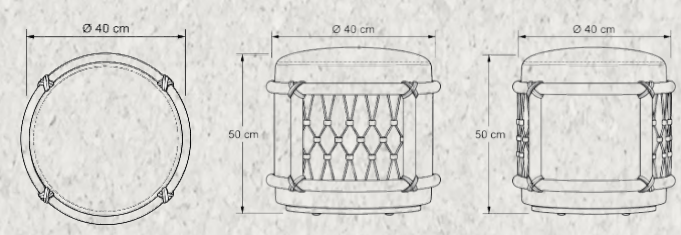

POUF

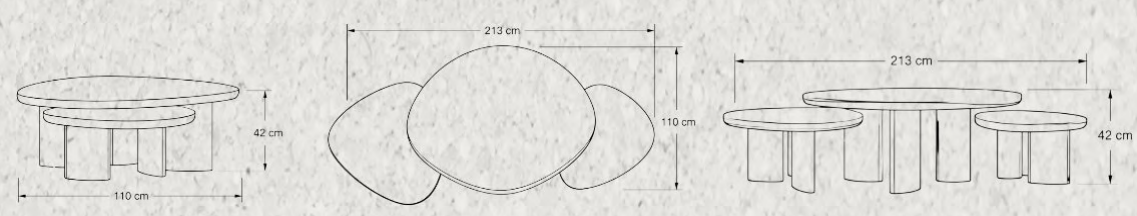

COFFEE TABLES SET

Designed By :
VANESSA VICTOR

لیال

LAYL



LAYL Lounge Set

a Refined Outdoor Lounge Set Comprising One Two-Seat Sofa, One Matching Armchair, and Three Nesting Coffee Tables.

Design Charachter:

Warm timber frames and olive-toned straps wrapping give the set its character. Ivory upholstery softens the timber profiles, while rounded tabletops echo the curves of the armchairs.

Comfort & Function:

Deep seats and generous back cushions invite relaxed seating. The sectional and armchairs face inward around the low coffee table, while the smaller tables keep drinks within easy reach.

Outdoor Performance:

The timber frames, woven rope, and upholstered cushions are designed for regular use on outdoor terraces and patios.

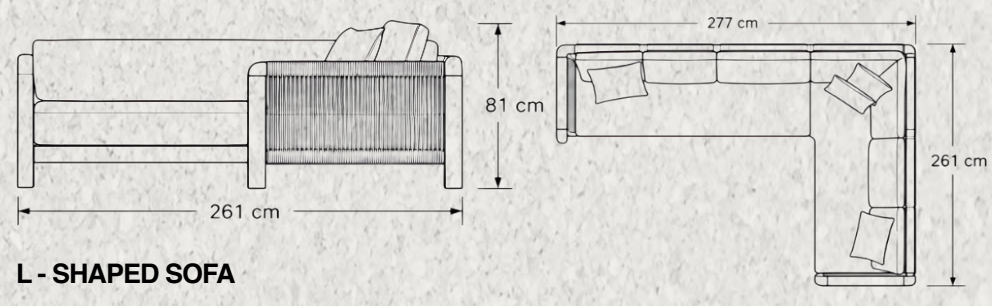

L - SHAPED SOFA

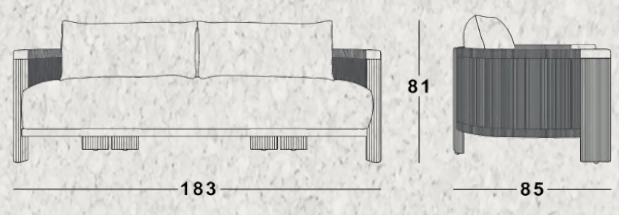

3 - SEATER SOFA

ARM CHAIR

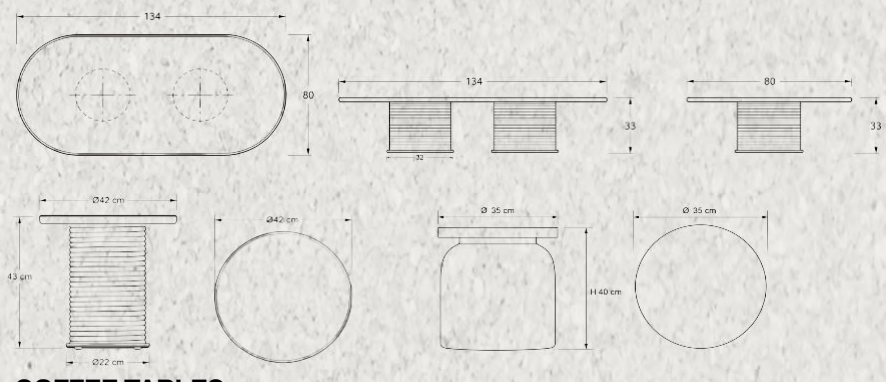

COFFEE TABLES

Designed By :

Attar X Mawazin Studio

ARABISQUE

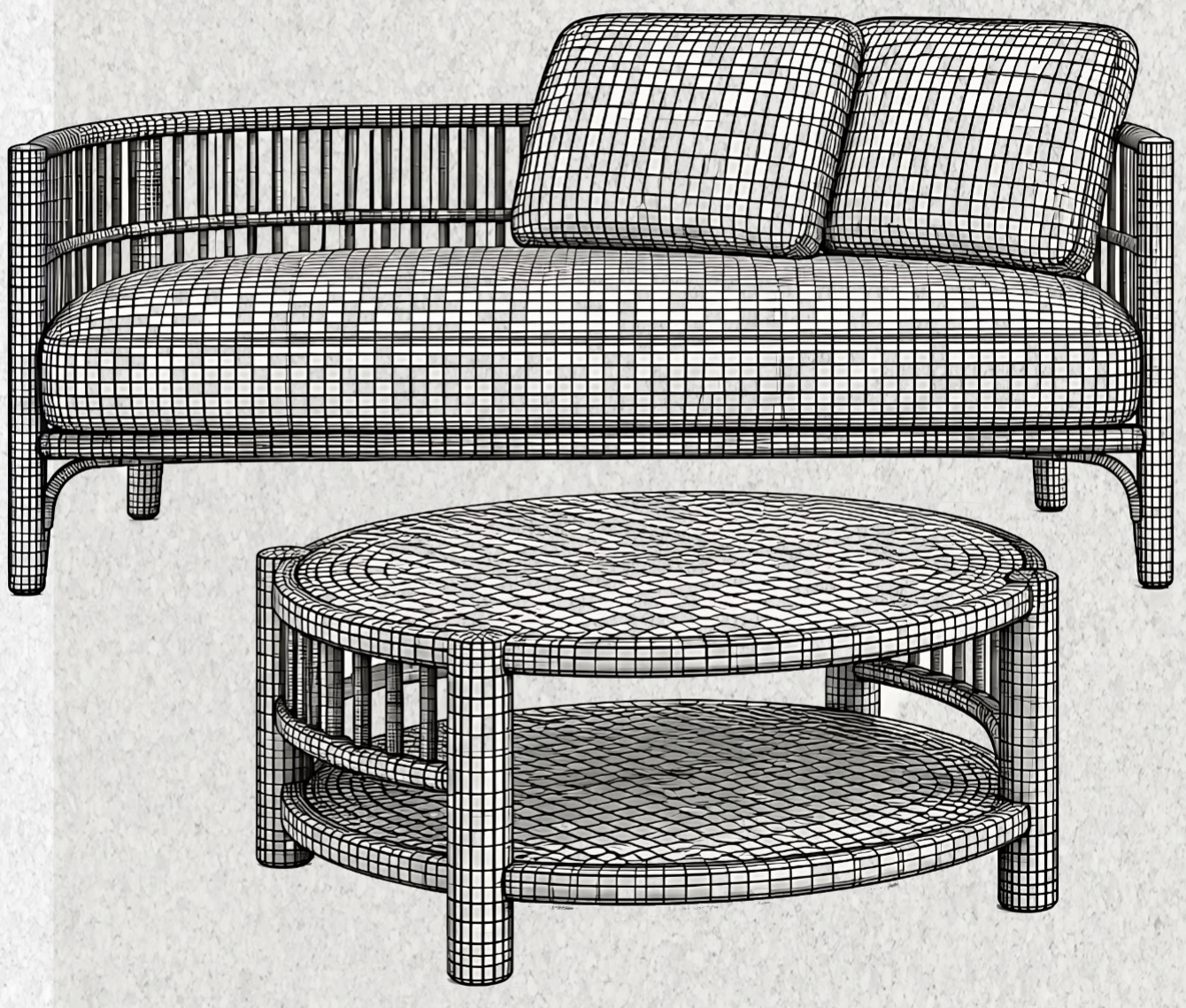

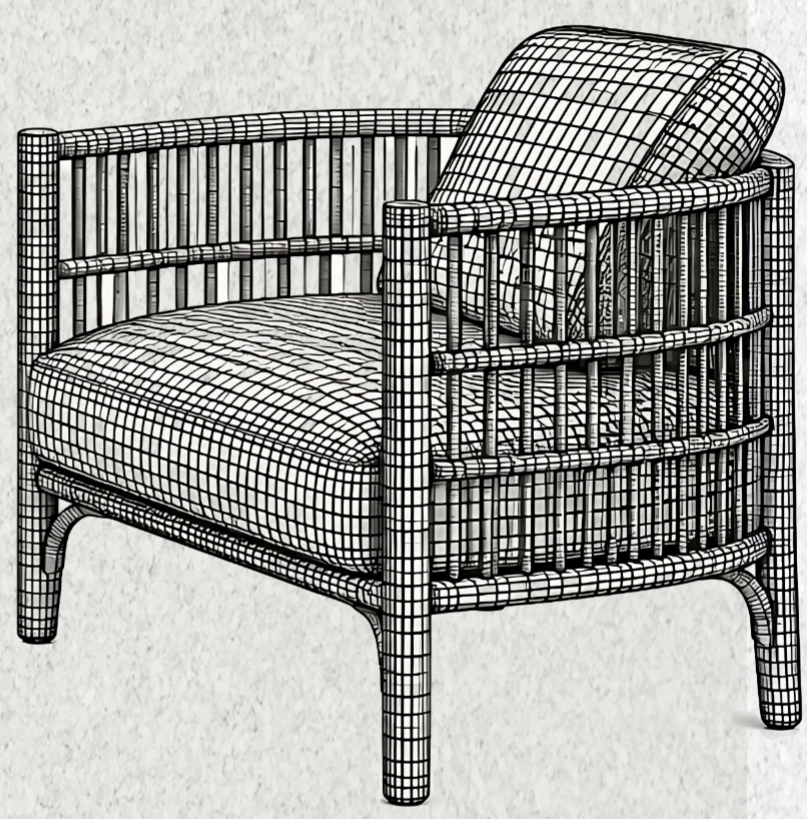

ARABISQUE Lounge Set

A refined outdoor lounge set comprising a two-seat sofa, a matching armchair, and a round two-tier coffee table.

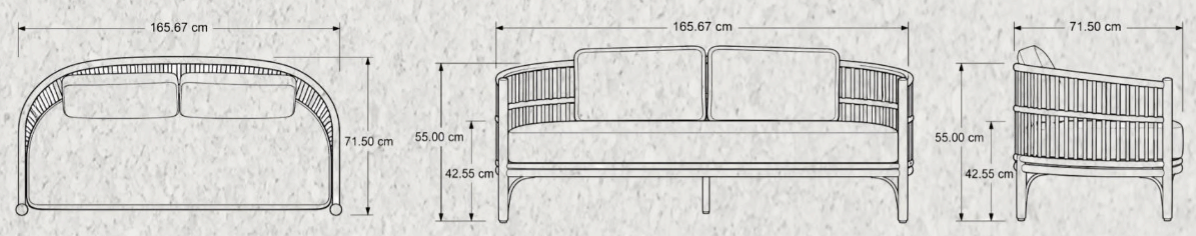

2 - SEATER SOFA

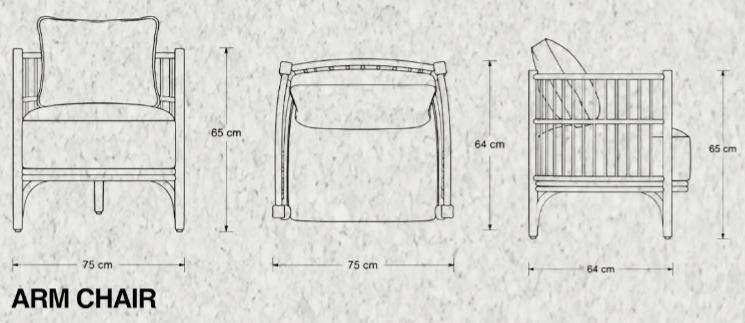

ARM CHAIR

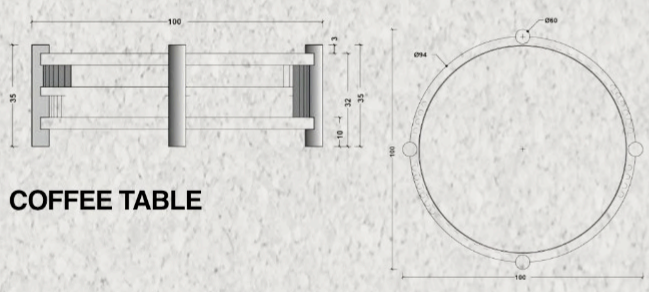

COFFEE TABLE

Design Charachter:

Rounded timber frames, slim vertical slats, and sand-toned cushions give the set a warm, understated look. The coffee table repeats the curved profiles and slatted detailing of the seating.

Comfort & Function:

Generous seat and back cushions provide relaxed support. The coffee table's lower shelf keeps everyday items within reach and leaves the top clear for serving.

Outdoor Performance:

The timber frames and cushioned seating are designed for regular outdoor use on patios and terraces.

Designed By :

Youssra Yassine x Mawazin Studio

أزمينة

AZMINA

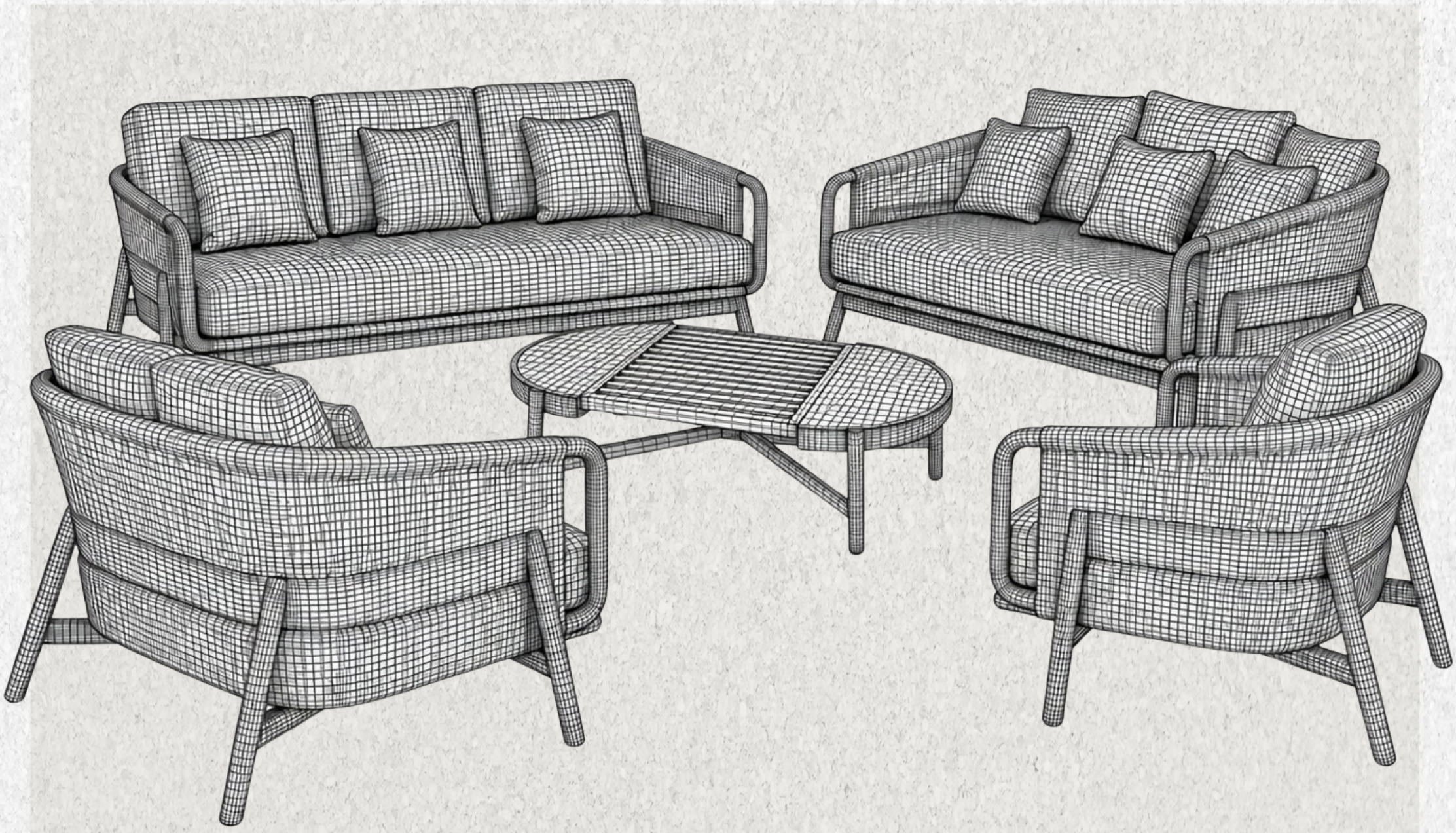

AZMINA Lounge Set

A refined outdoor lounge set comprising two sofas, two matching armchairs, and a rounded timber coffee table.

Design Charachter:

Warm timber frames, curved arms, and woven rope panels give the seating a soft, open profile. Ivory cushions contrast with the timber, while the slatted coffee table echoes the lines of the rope weave.

Comfort & Function:

Deep seats and generous back cushions offer relaxed support. The sofas and armchairs gather around the low coffee table, creating a comfortable setting for conversation.

Outdoor Performance:

Timber frames, woven rope panels, and upholstered cushions are designed for regular outdoor use on patios and terraces.

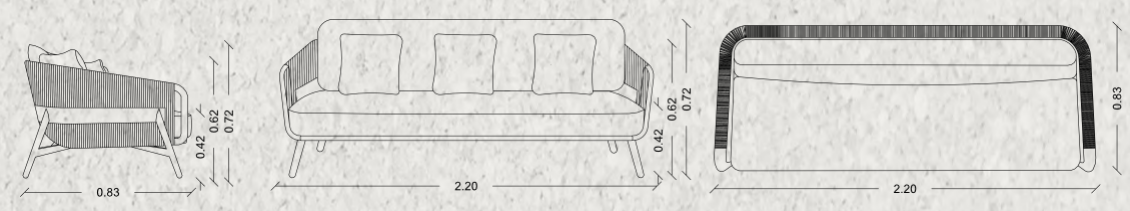

3 - SEATER SOFA

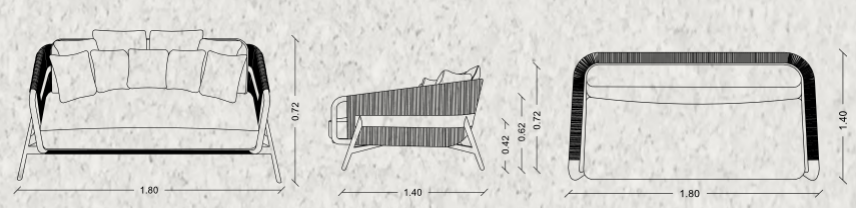

LOVE SEAT

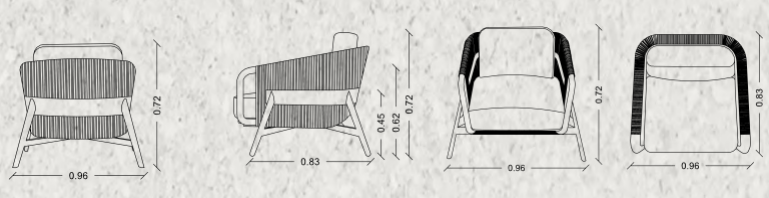

ARM CHAIR

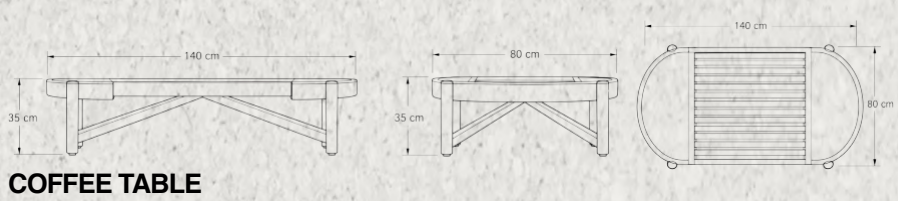

COFFEE TABLE

Designed By :

Khalid Tahoun x Mawazin Studio


R A H H A

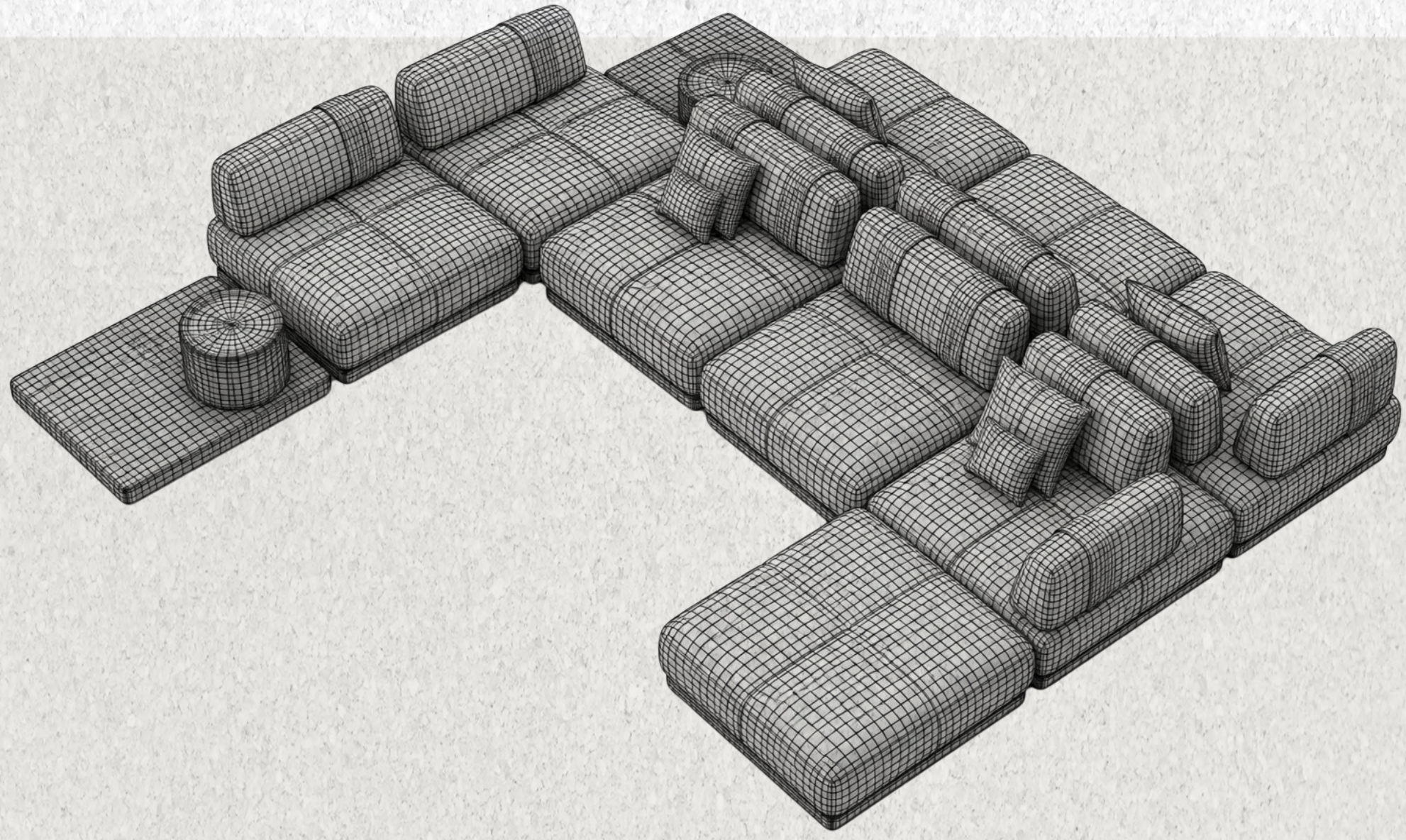

RAHHA Modular Lounge Set

A contemporary outdoor lounge set combining upholstered seating modules, chaise sections, and integrated timber platforms.

Design Charachter:

Low timber bases and generous ivory cushions create a relaxed profile. Rectangular backrests define each module, while grey, taupe, and mustard cushions add warmth and contrast.

Comfort & Function:

Deep seats and extended chaise sections accommodate relaxed lounging. The modular arrangement supports different seating layouts, with timber platforms providing convenient surfaces beside the seats.

Outdoor Performance:

For lasting outdoor use, specify weather-resistant upholstery, quick-drying cushions, and timber finishes suited to sun and moisture exposure.

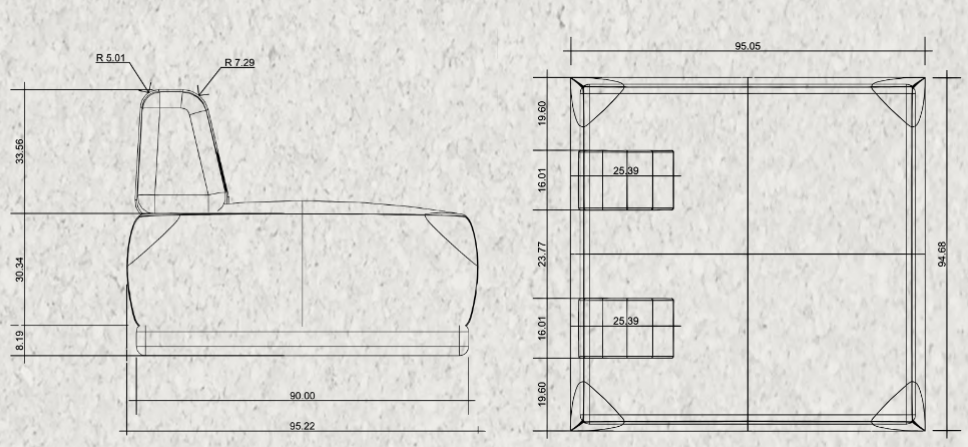

POUF WITH BACK REST

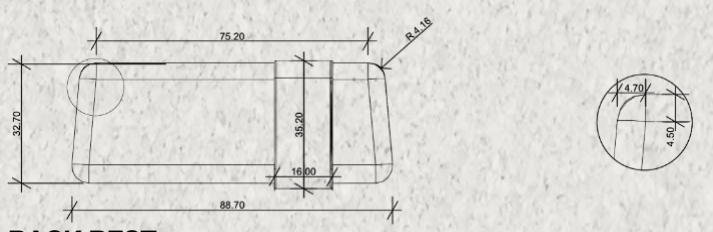

BACK REST

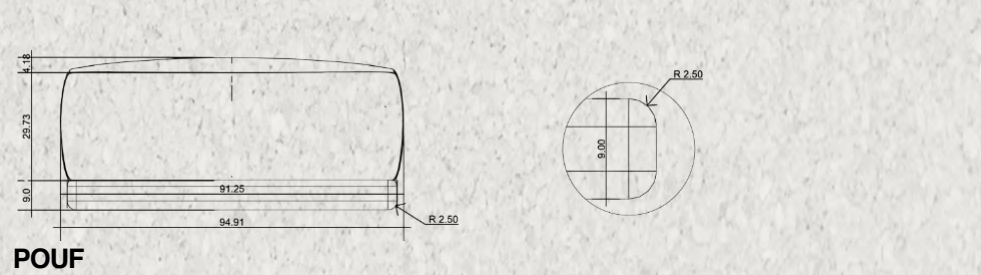

POUF

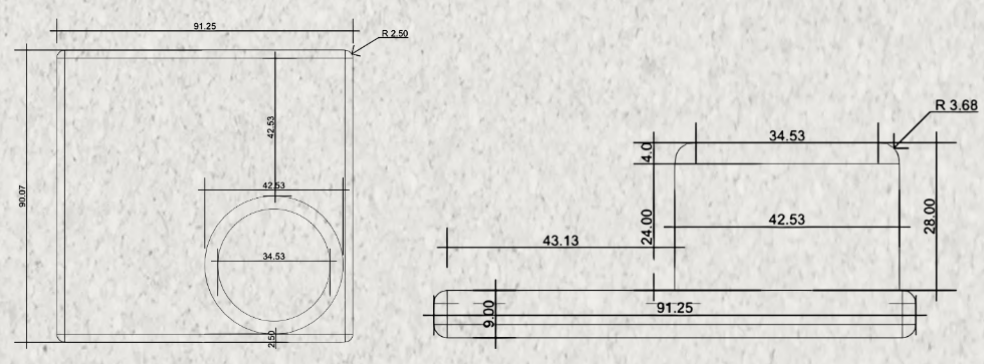

COFFEE TABLE

Designed By :

Abdrabboh Design House


E N S E Y A B



ENSEYAB Lounge Set

A refined outdoor lounge set comprising a three-seat sofa and a matching rectangular timber coffee table.

Design Charachter:

Warm timber frames and gently curved armrests define the sofa. A charcoal seat cushion contrasts with ivory back cushions, while the slatted coffee table complements the exposed wood detailing.

Comfort & Function:

A generous seat cushion and layered back cushions provide relaxed support. The spacious coffee table offers a convenient surface for drinks and accessories.

Outdoor Performance:

For lasting outdoor use, weather-resistant fabrics, quick-drying cushion fillings, and a protective timber finish suited to sun and moisture exposure.

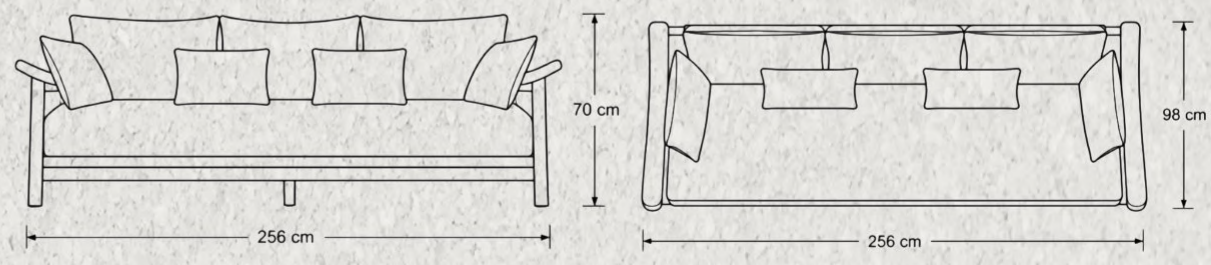

3 - SEATER SOFA

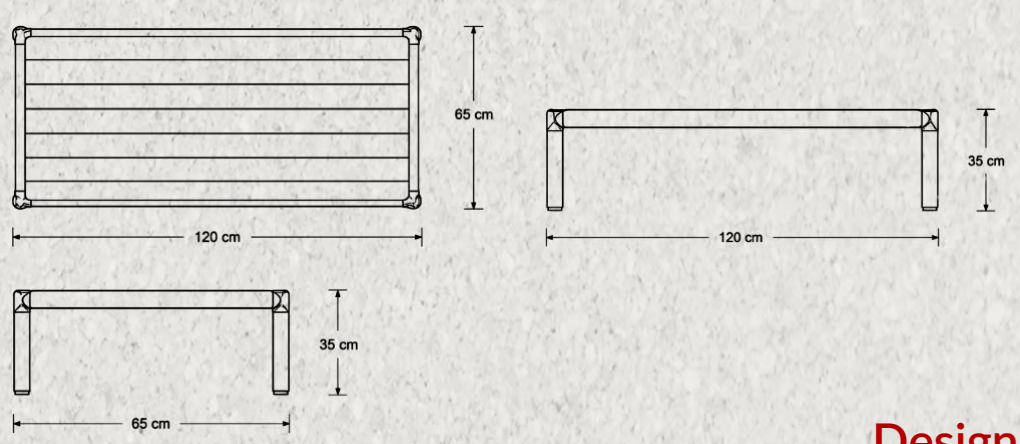

COFFEE TABLE

Designed By :
Cherif Morsi

سُمو

S U M U

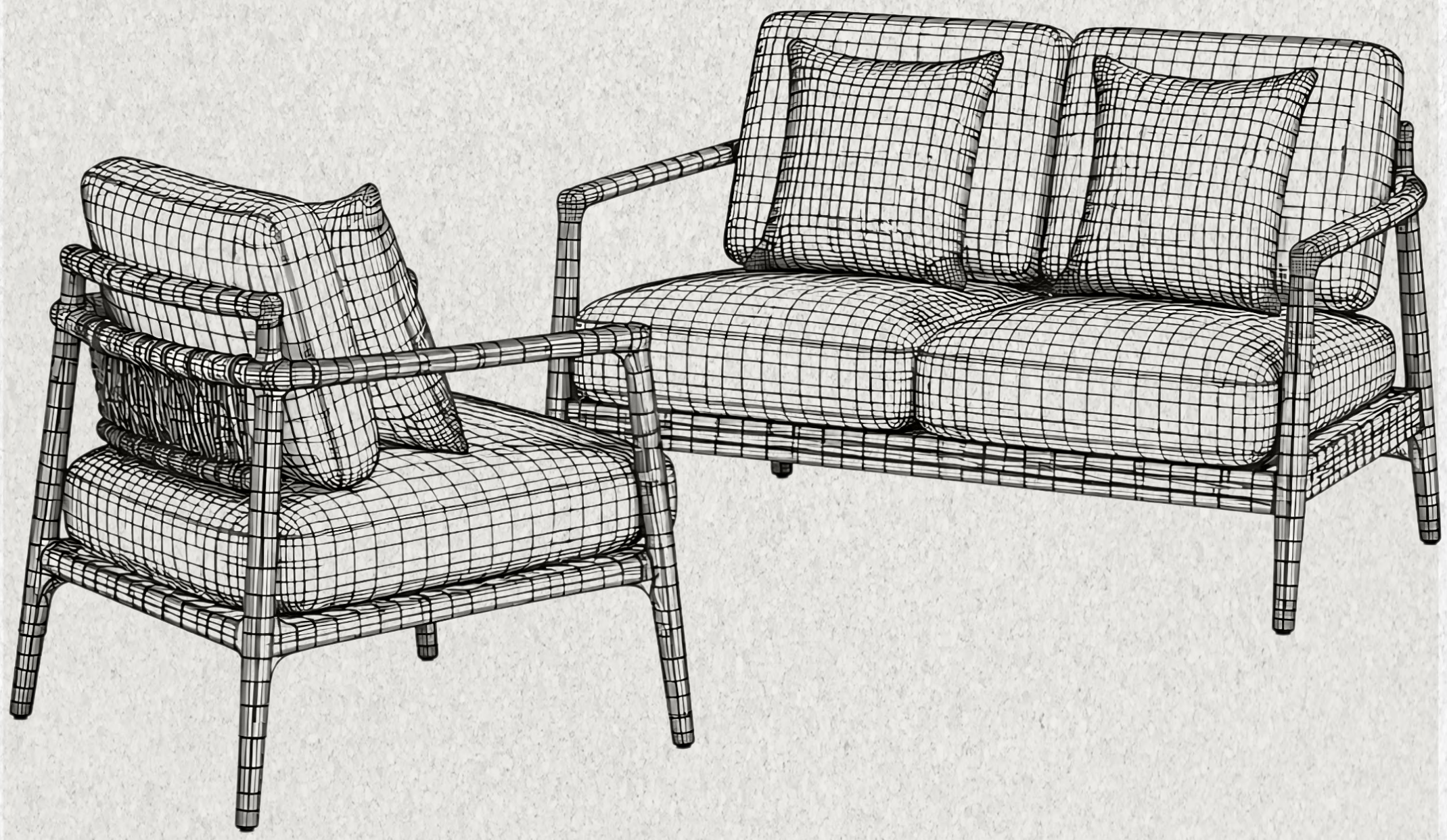

SUMU Lounge Set

A refined lounge collection combining warm natural wood, soft neutral upholstery, and handcrafted woven detailing.

Design Charachter:

Rounded timber frames and woven back panels create a warm, handcrafted look. Ivory upholstery softens the exposed wood, while terracotta cushions introduce a rich accent.

Comfort & Function:

Generous seat and back cushions provide relaxed support. Smooth timber armrests and gently inclined backs create a comfortable setting for conversation.

Outdoor Performance:

For lasting outdoor use, weather-resistant upholstery, outdoor-grade weaving, and protective timber finishes suited to sun and moisture exposure.

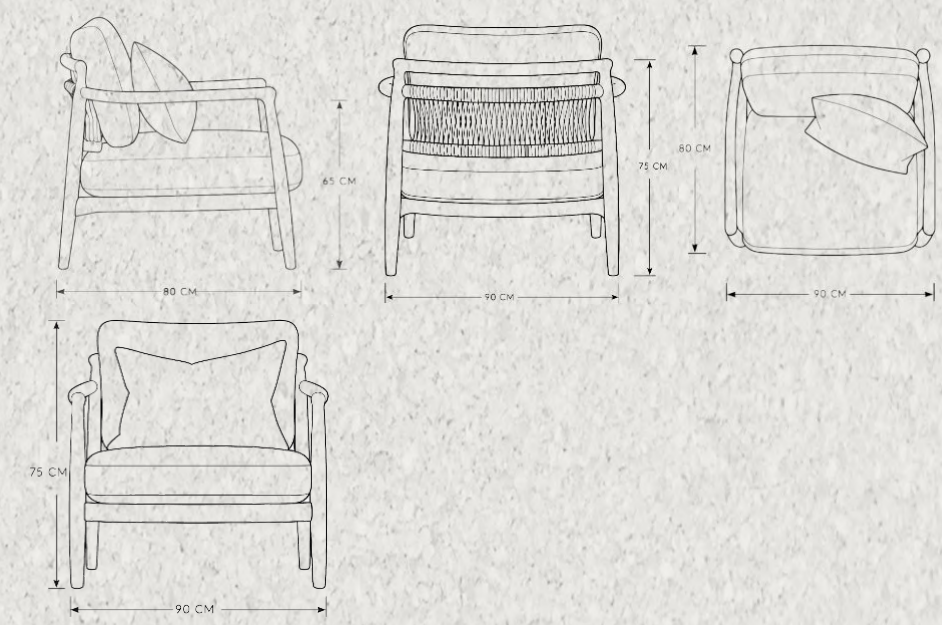

ARM CHAIR

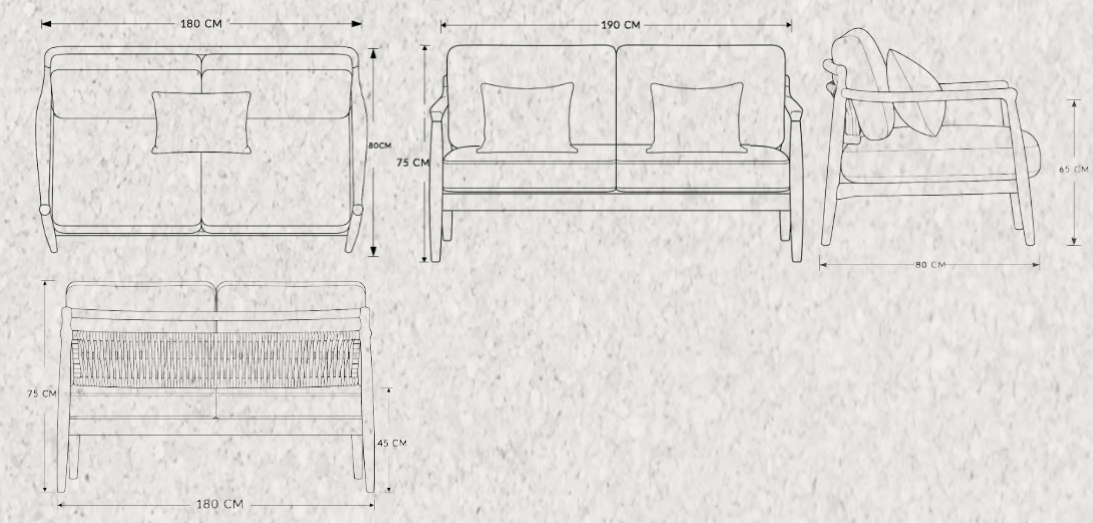

2- SEATER SOFA

Designed By :
VANESSA VICTOR


مَصري
M A S S R I

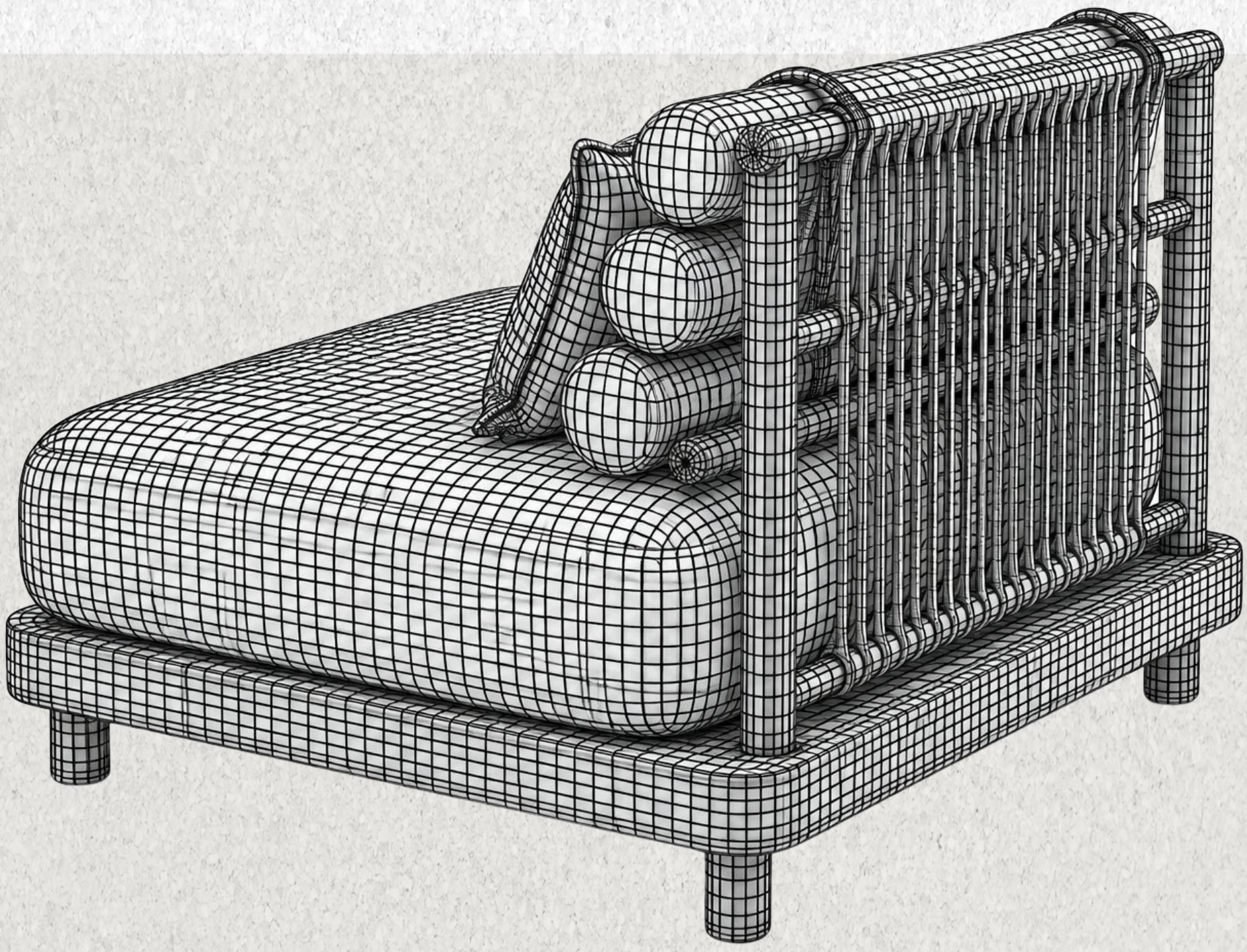

MASSRI Lounge Set

A contemporary outdoor lounge set comprising an L-shaped sectional modules, a matching armchair, and an elongated timber coffee table.

Design Charachter:

Rounded timber bases and horizontal bolster backrests define the seating. Ivory cushions and mustard accents bring warmth, while the armchair's woven rope back adds texture. The slatted coffee table echoes the set's softly rounded forms.

Comfort & Function:

Deep seat cushions and layered bolster backrests offer relaxed support. The sectional creates a generous gathering space, complemented by an individual armchair and a spacious coffee table.

Outdoor Performance:

For lasting outdoor use, weather-resistant upholstery, outdoor-grade rope, and protective timber finishes suited to sun and moisture exposure.

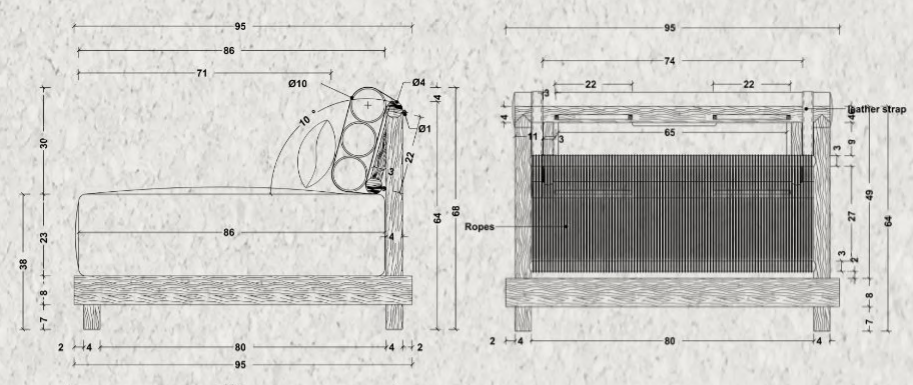

CHAIR MODULE

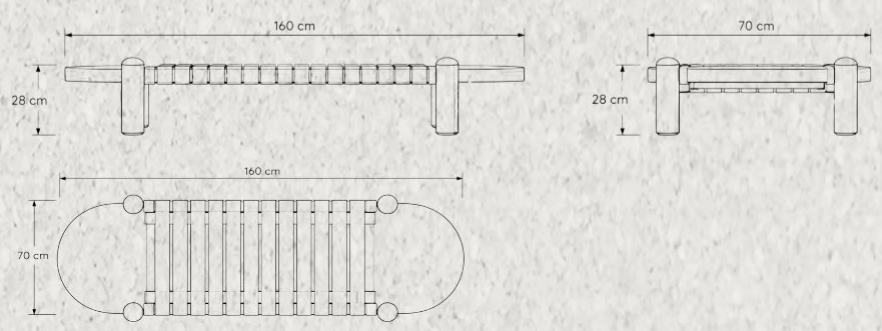

COFFEE TABLE

Designed By :

Youssra Yassine

سُكون

S U K U N

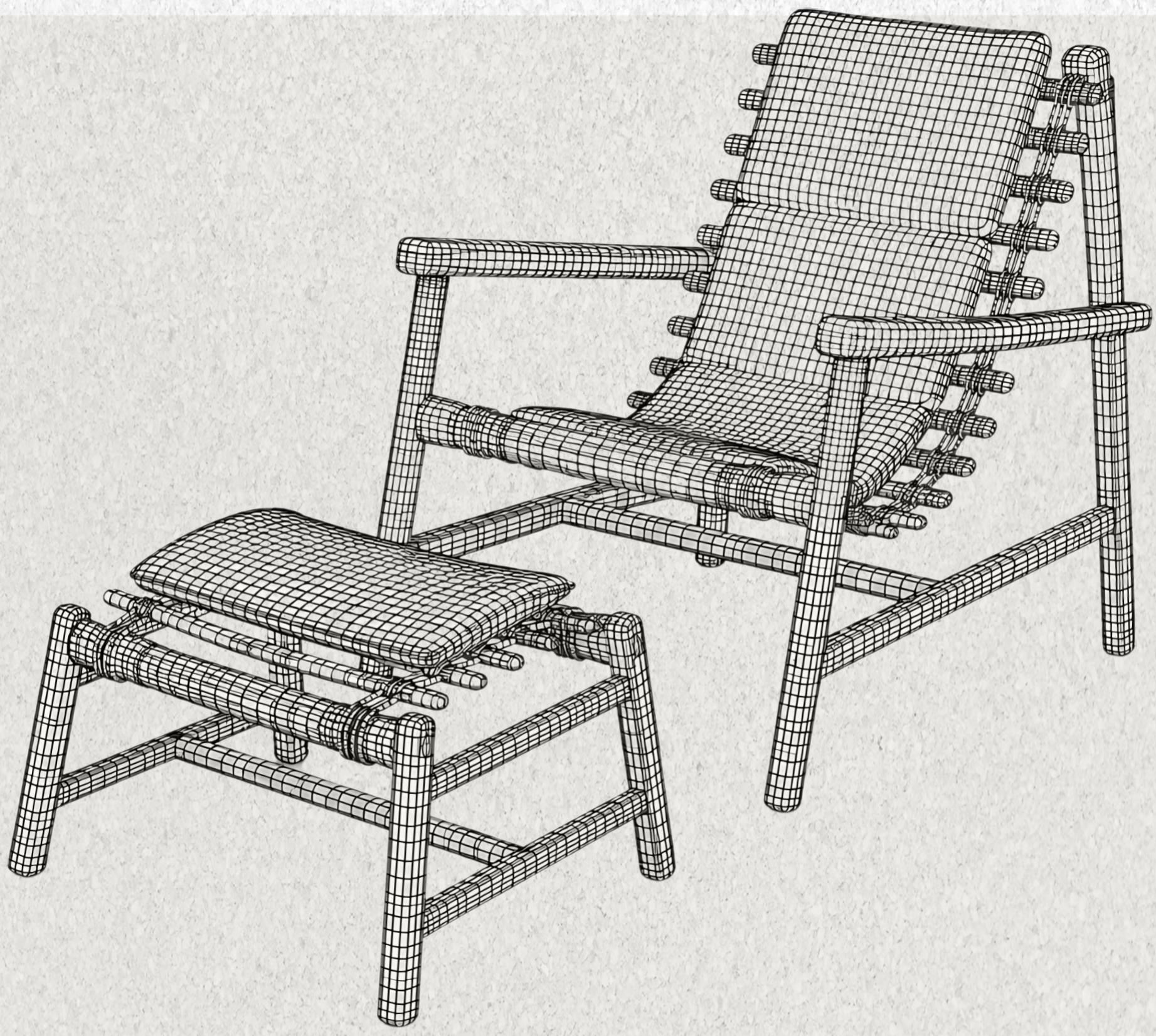

SUKUN Lounge Chair

A This lounge chair and footrest set is designed as a relaxed outdoor statement piece, blending handcrafted timber construction with soft upholstered comfort.

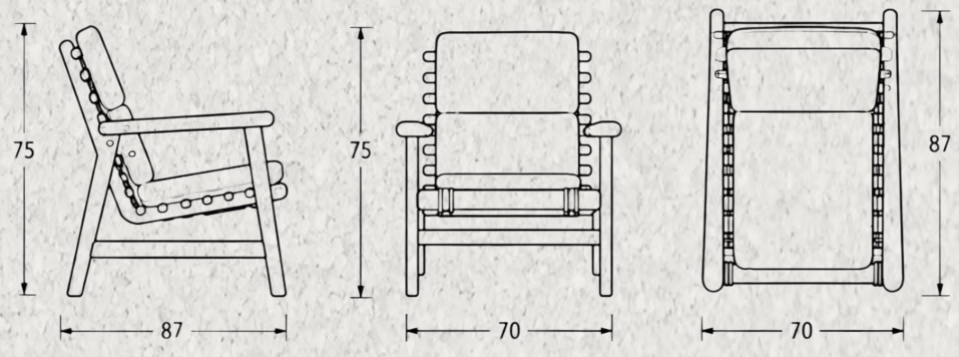

Design Charachter:

Warm timber frames, rounded armrests, and visible rope bindings create a handcrafted character. Beige cushions soften the open structure, while horizontal timber details define the inclined backrest.

Comfort & Function:

The angled backrest and padded seat support relaxed lounging. A separate cushioned footstool provides leg support and flexible positioning.

Outdoor Performance:

For lasting outdoor use, weather-resistant upholstery, outdoor-grade bindings, and protective timber finishes suited to sun and moisture exposure.

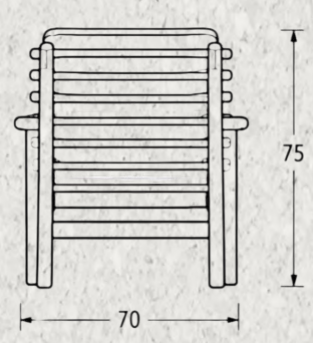

LOUNGE CHAIR

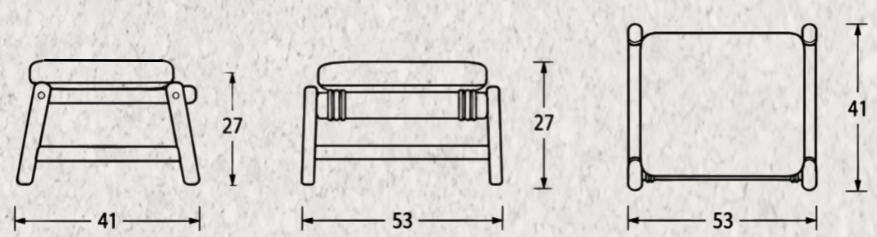

OTTOMAN

Designed By :
Mawazin Studio

وَثِير

WATHEER

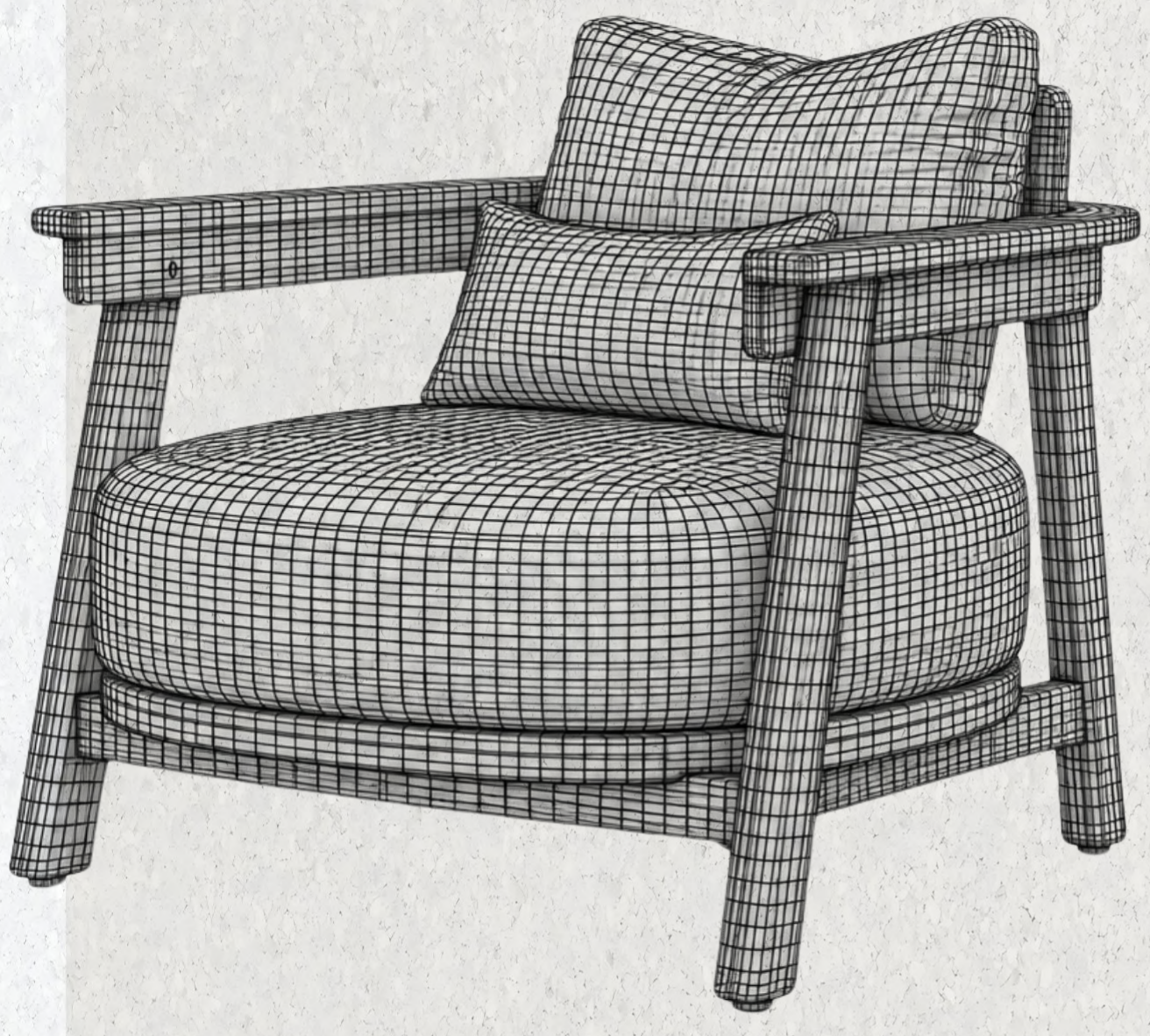

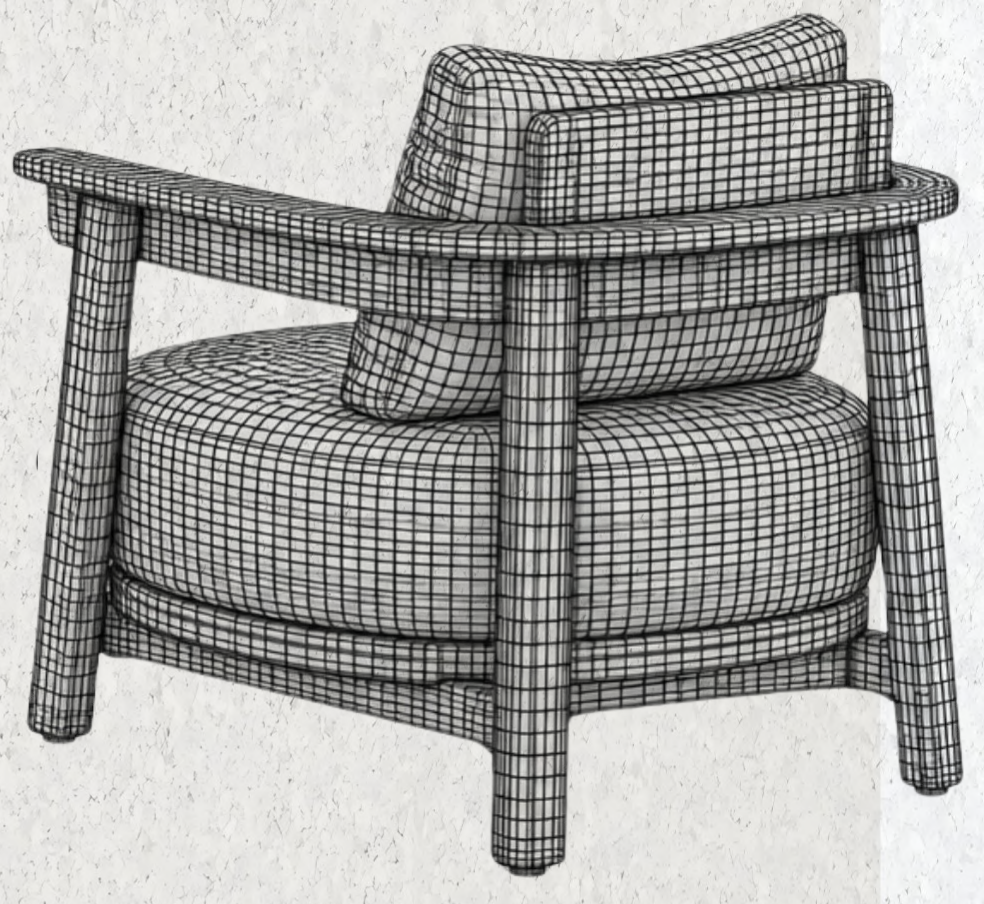

WATHEER Arm Chair

A contemporary timber lounge chair with a generously cushioned seat and a loose back cushion.

Design Charachter:

Broad timber armrests, angled legs, and an exposed frame create a strong architectural profile. Rounded upholstery softens the structure, with neutral and terracotta options adding warmth.

Comfort & Function:

A deep, padded seat and generous back cushion invite relaxed sitting. Wide armrests provide comfortable support, while an accent cushion adds a softer finishing layer.

Outdoor Performance:

For outdoor applications, weather-resistant upholstery, quick-drying cushion fillings, and a protective timber finish suited to sun and moisture exposure.

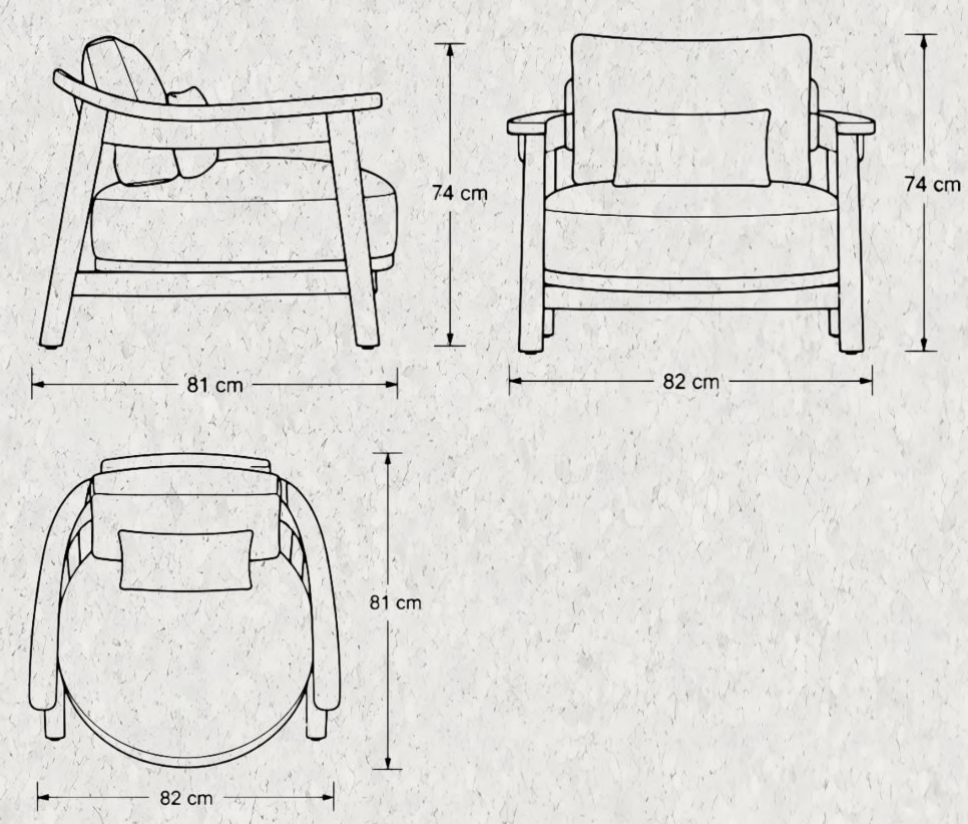

ARM CHAIR

Designed By :
Cherif Morsi

غصون

GHOSOUN

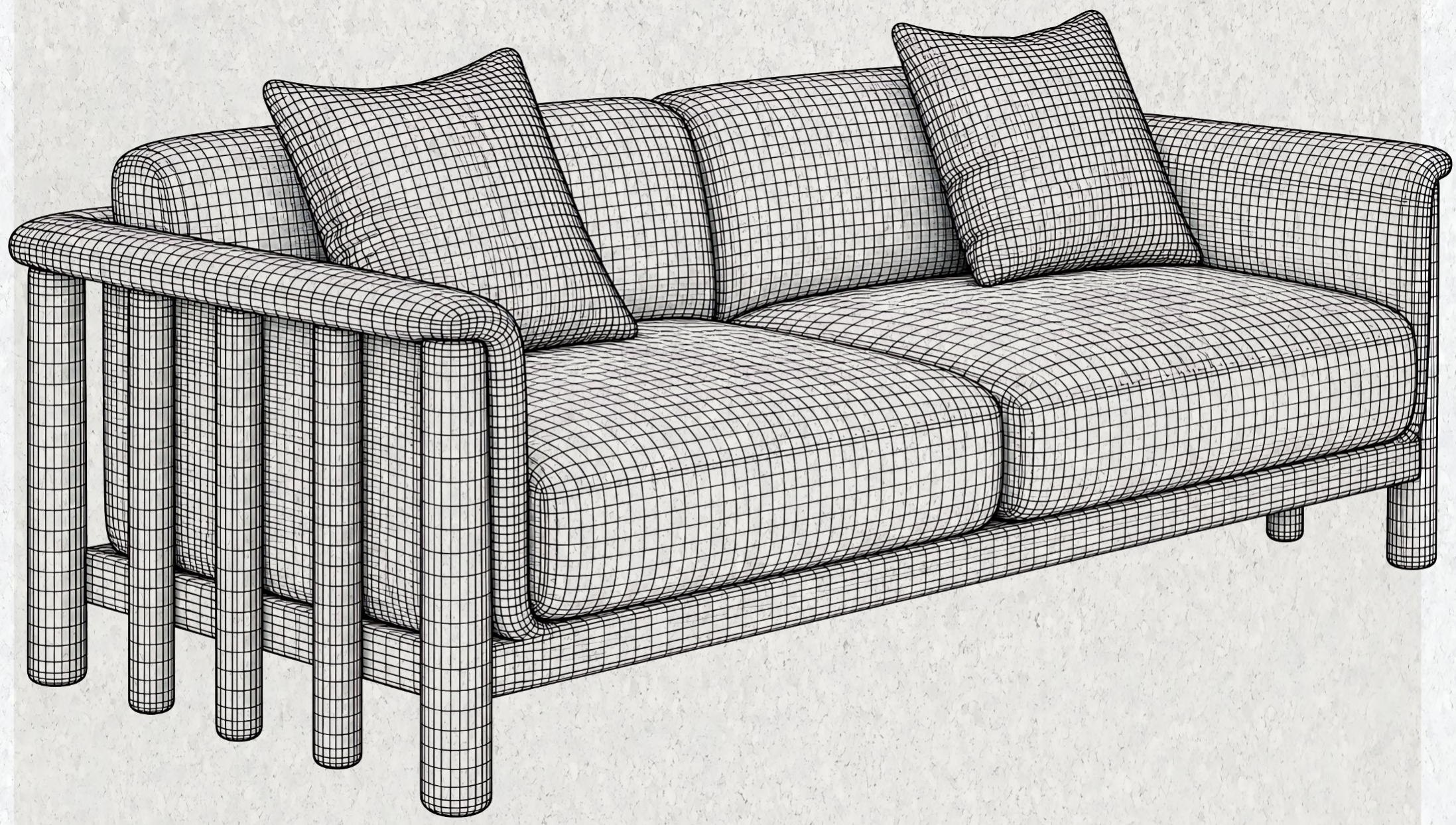

GHOSOUN 2 - Seater Sofa

A contemporary outdoor sofa combining an exposed timber frame with olive upholstery and striped seat cushions.

Design Charachter:

Vertical timber supports define the open sides, while upholstered arms and backrests soften the frame. Earth-toned stripes and rust accent cushions add warmth and a playful rhythm.

Comfort & Function:

Generous seat cushions, padded arms, and loose back cushions provide support for relaxed lounging and conversation.

Outdoor Performance:

For lasting outdoor use, weather-resistant fabrics, quick-drying cushion fillings, and protective timber finishes suited to sun and moisture exposure.

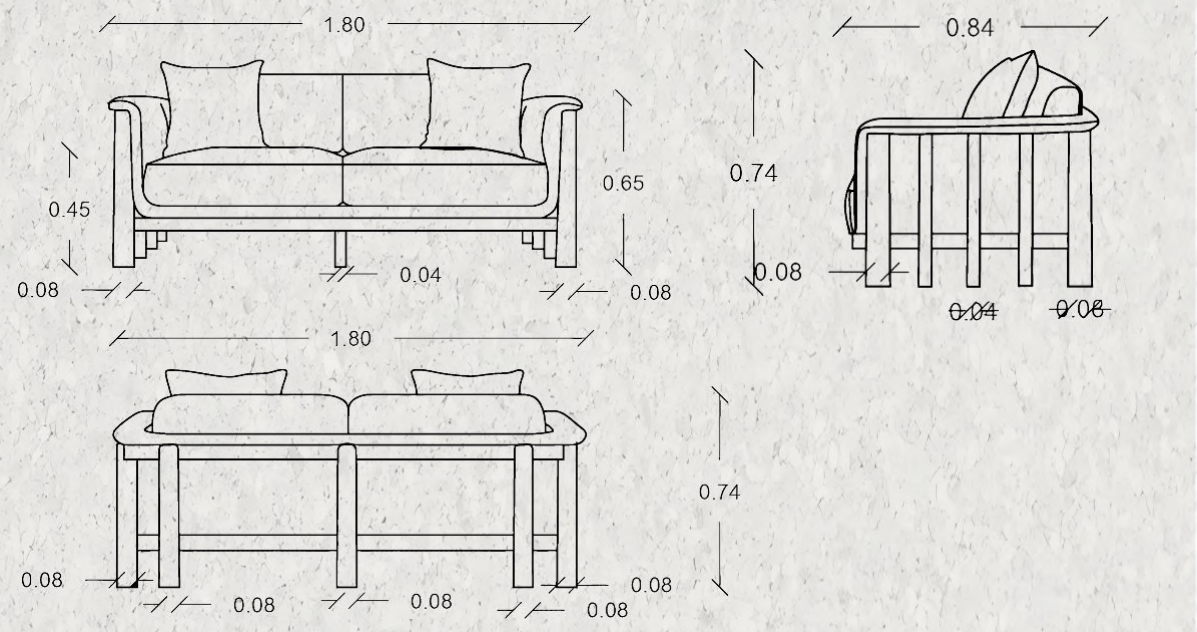

2 - SEATER SOFA

Designed By :
Mawazin Studio


طيف
T A Y F

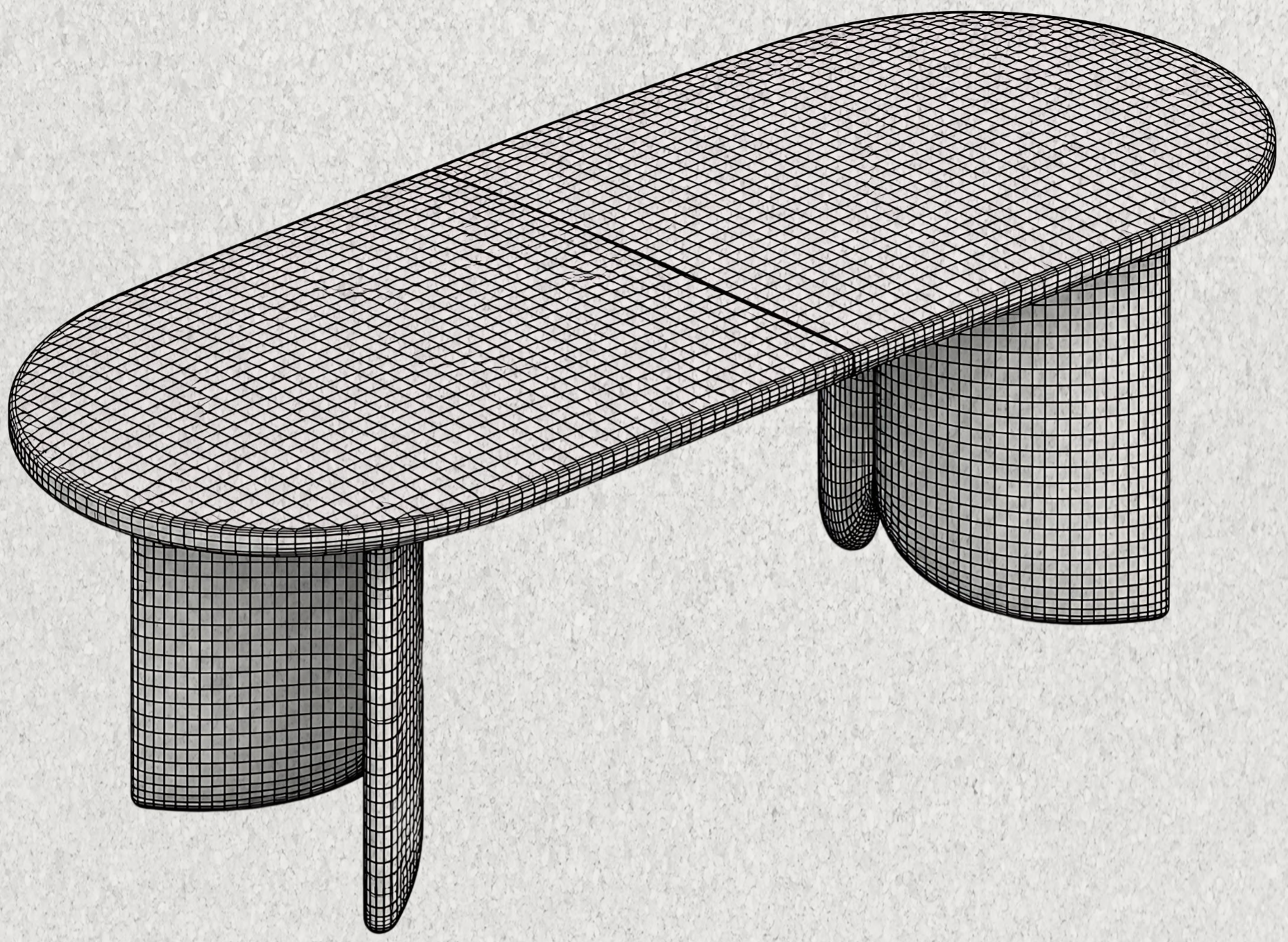

TAYF Dining Table

Dining table variations share a slim, capsule-shaped top and inset curved panel supports. The finishes pair vivid blue with warm timber or polished metal, while a third version combines bronze-tinted glass with a timber base.

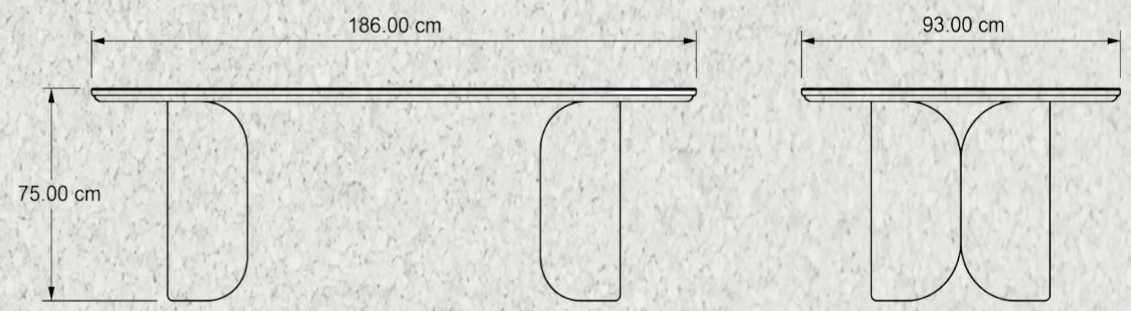

DINING TABLE

Design Charachter:

A crisp line divides the two-tone tabletops, emphasizing their rounded ends. The bronze glass version reveals the curved supports beneath, making the base part of the composition.

Comfort & Function:

The elongated top leaves room for shared dishes, while the inset supports keep both ends open for chair placement.

Outdoor Performance:

For outdoor use, UV-resistant coatings, protected timber and metal finishes, and exterior-grade safety glass for the bronze-tinted version.

Designed By :
Matteo Squaiella

رباط

REBAT

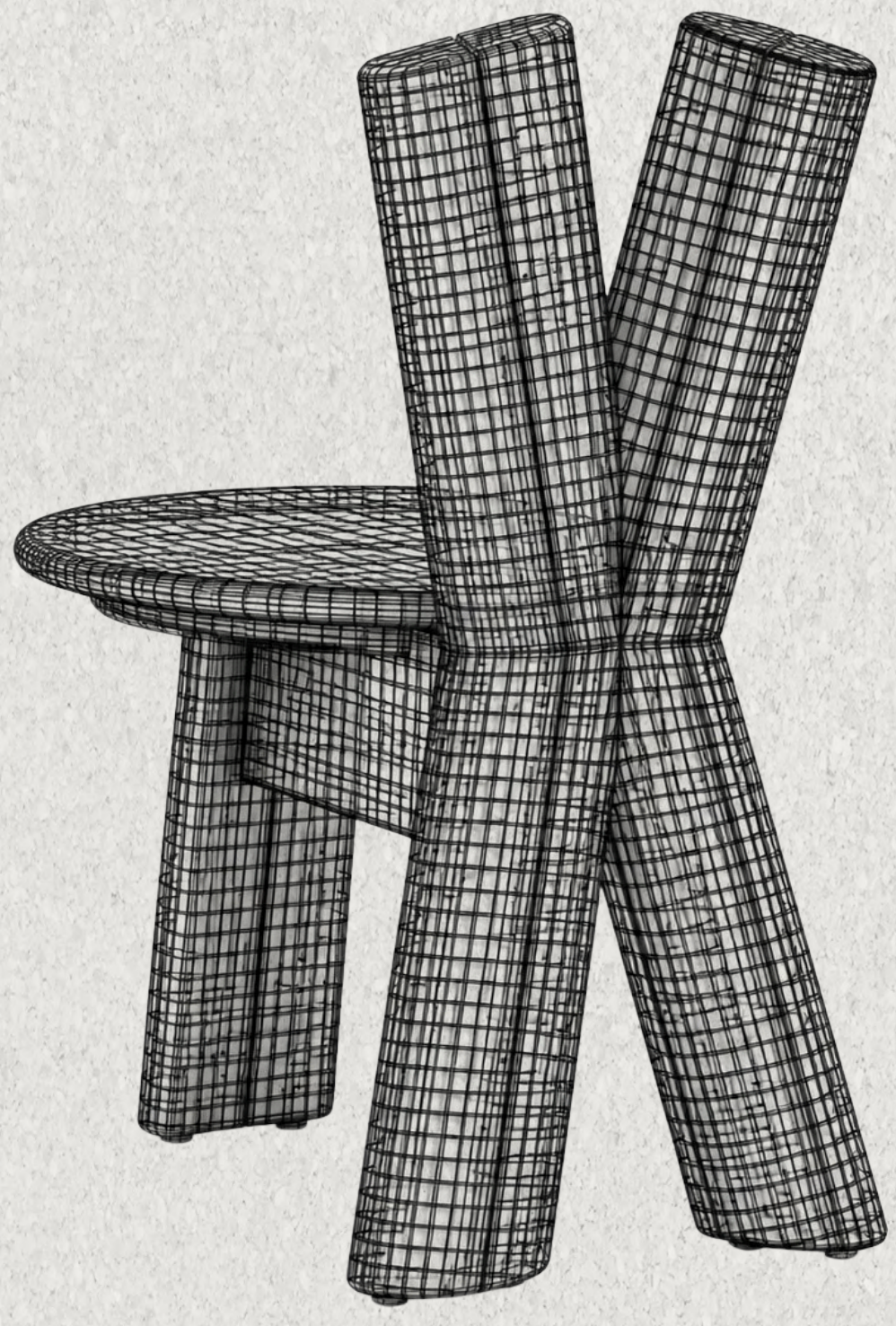

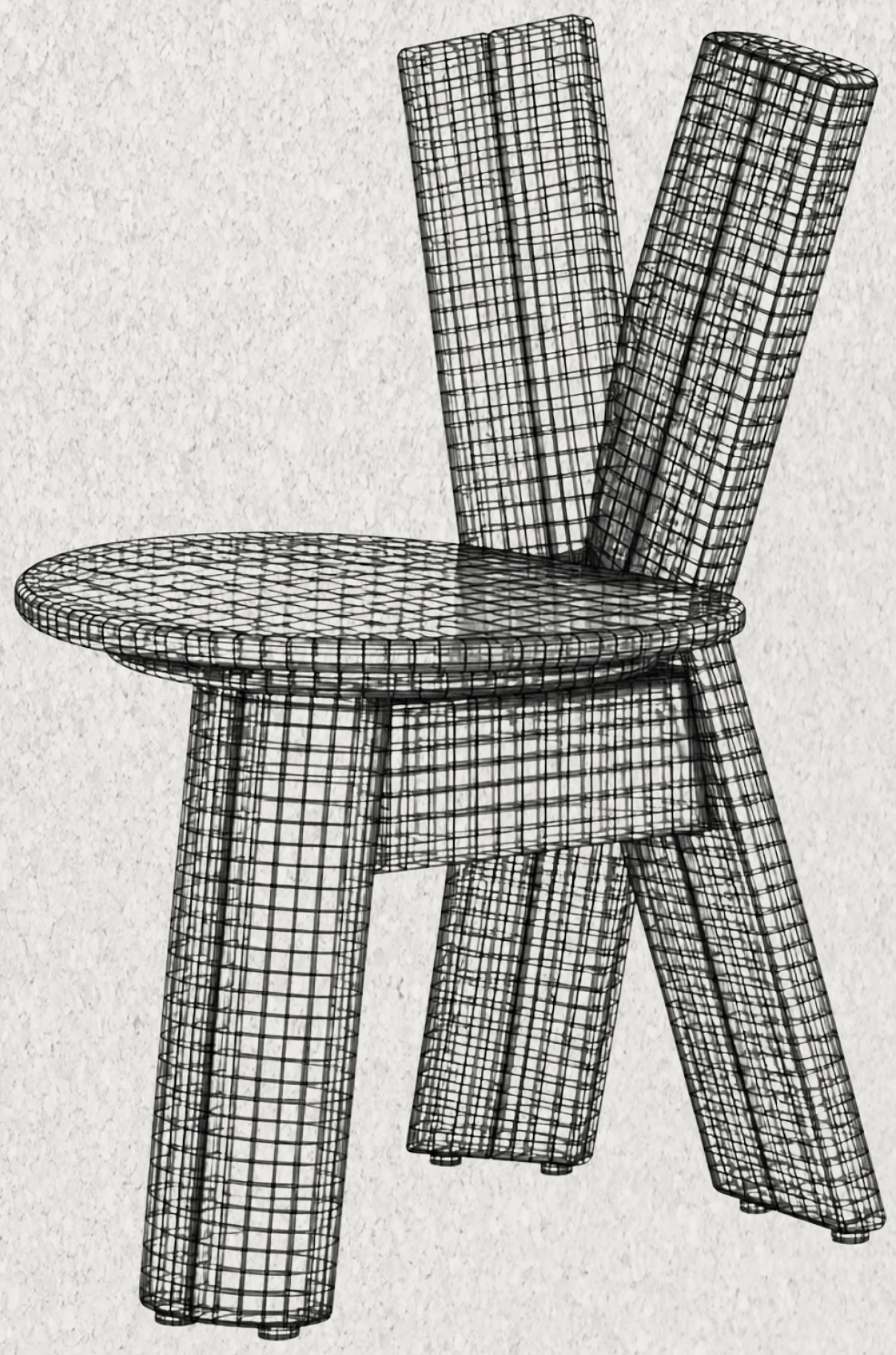

REBAT Dining Chair

A pair of sculptural timber chairs in deep brown and honey finishes, shown with bare timber and upholstered seats.

Design Charachter:

Two broad timber uprights spread into a distinctive V-shaped backrest. The rounded seats soften the angular frames, while a mustard and cream check adds contrast to the lighter chair.

Comfort & Function:

The armless profile allows easy access from either side. The cushioned version adds padding for longer sitting.

Outdoor Performance:

For outdoor use, a protective timber finish and weather-resistant fabric for the cushioned version.

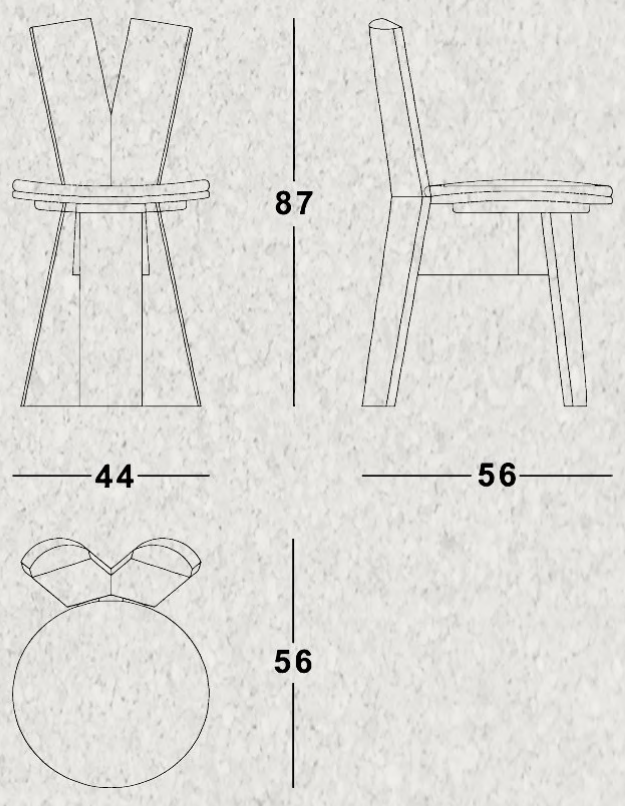

DINING CHAIR

Designed By :
Cherif Morsi

مَصري
MASSRI

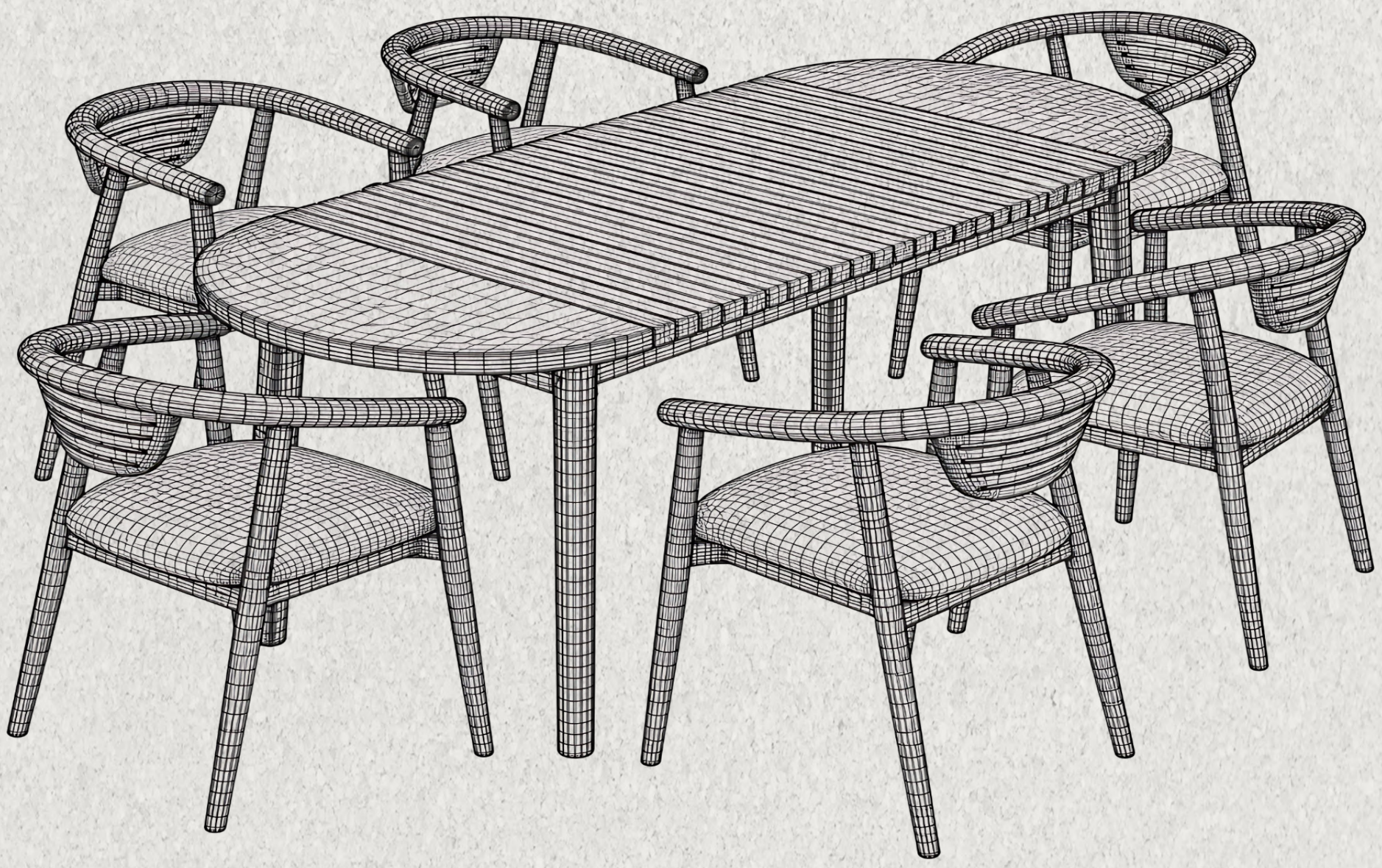

MASSRI Dining Set

A refined timber dining set pairing a rectangular slatted table with curved armchairs and upholstered seats.

Design Charachter:

Rounded timber profiles and horizontal chair back slats create a warm, cohesive look. Beige seat cushions soften the exposed frames and complement the natural wood tones.

Comfort & Function:

Curved backrests, integrated armrests, and padded seats support comfortable dining. The generous tabletop provides ample space for shared meals and serving.

Outdoor Performance:

For outdoor use, weather-resistant seat fabrics and protective timber finishes suited to sun and moisture exposure. The slatted tabletop allows water to drain between the boards.

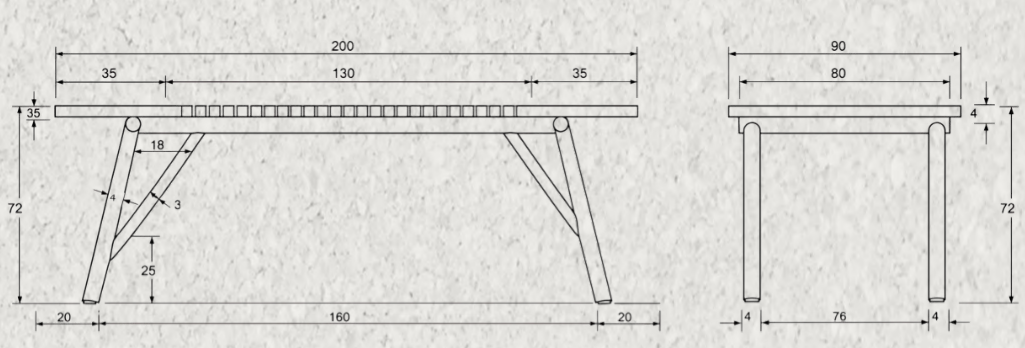

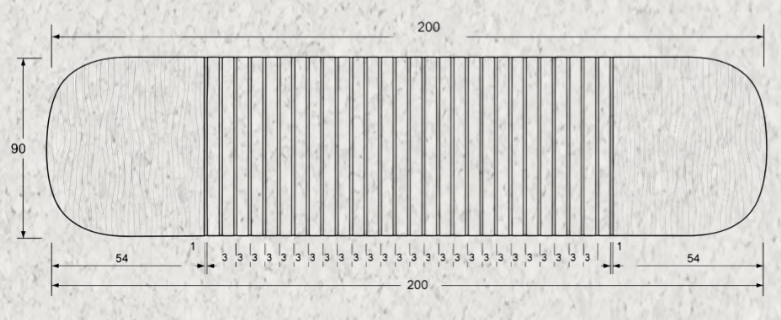

DINING TABLE

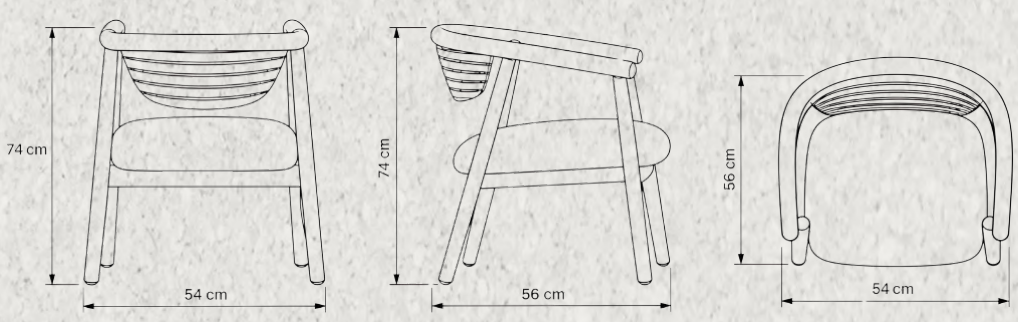

DINING CHAIR

Designed By :
Youssra Yassine

ظلال

THE LAL

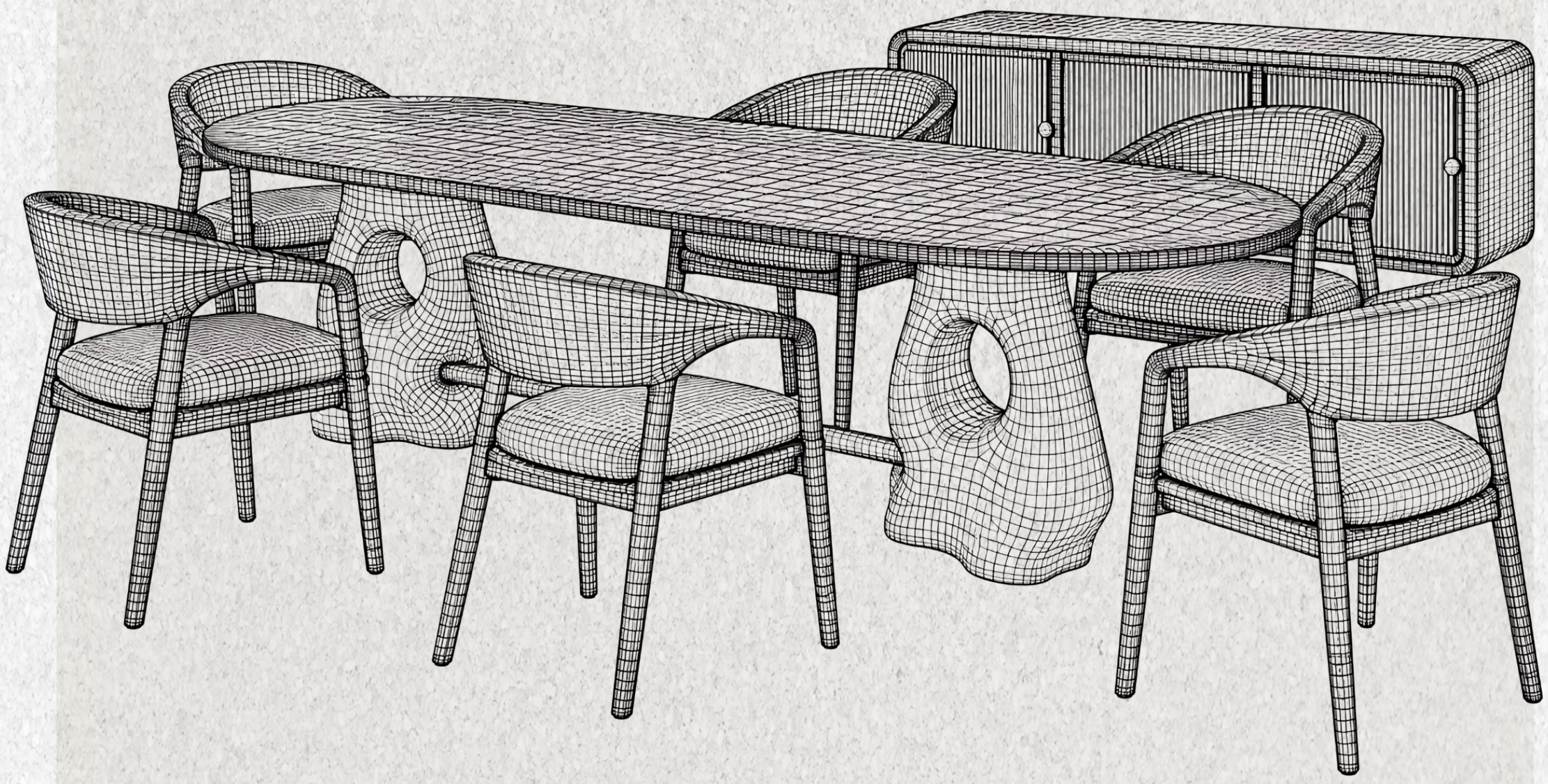

THELAL Dining Set

A contemporary dining set pairing an elongated table with six upholstered timber armchairs in contrasting dark and natural finishes.

Design Charachter:

A slim, dark tabletop with rounded ends rests on sculptural stone pedestals with circular openings. Curved chair backs and ivory seat cushions soften the composition.

Comfort & Function:

Wraparound backrests, integrated armrests, and padded seats support relaxed dining. The generous tabletop provides space for shared meals and serving.

Outdoor Performance:

For outdoor use, weather-resistant upholstery, sealed stone surfaces, and timber finishes suited to sun and moisture exposure.

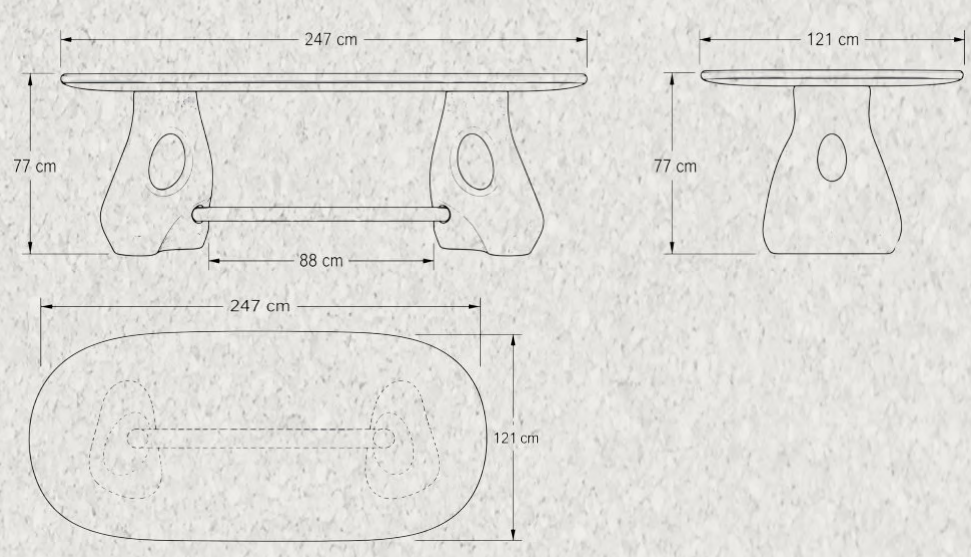

DINING TABLE

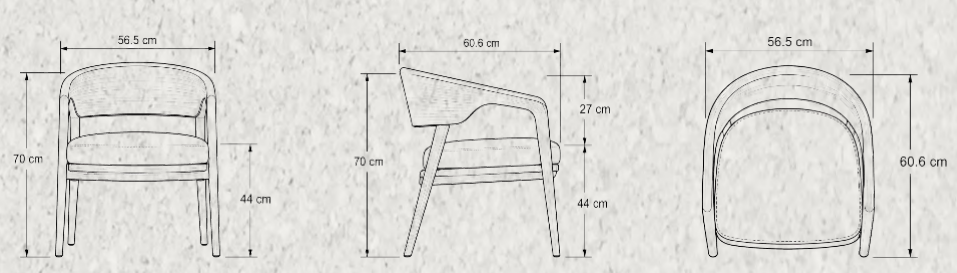

DINING CHAIR

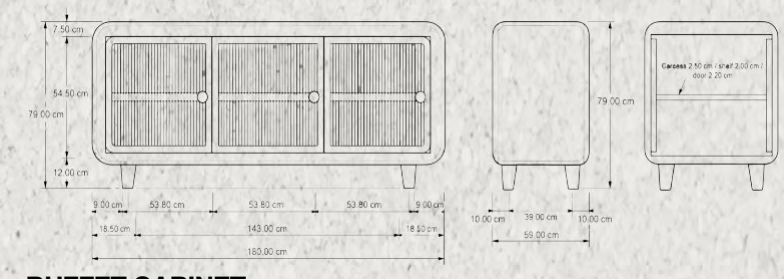

BUFFET CABINET

Designed By :
Reem Essmat

رواق

R A W A A

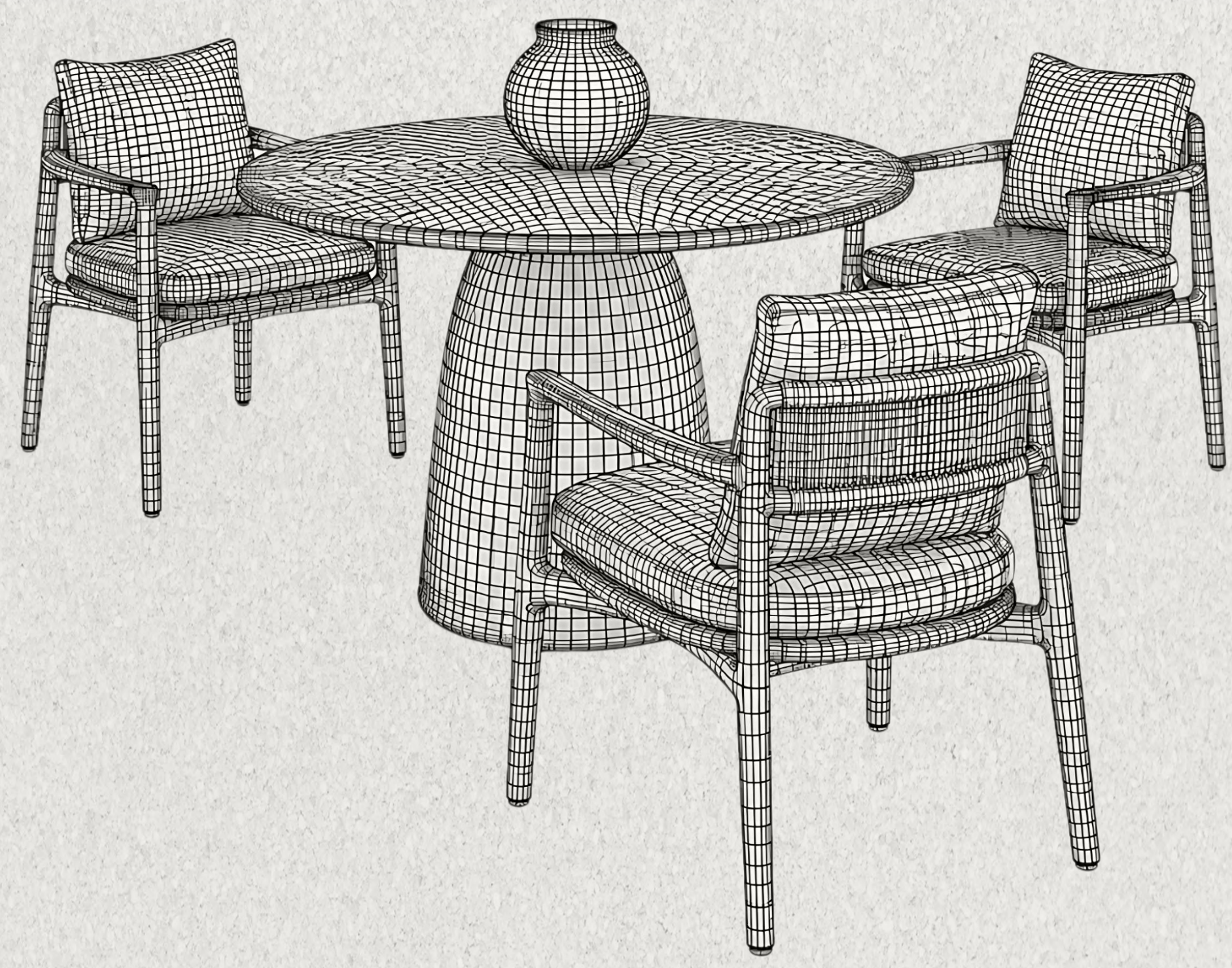

RAWAA Dining Set

A refined outdoor dining set pairing a round pedestal table with timber armchairs featuring woven rope backs and neutral cushions.

Design Charachter:

A slim circular tabletop and softly tapered pedestal create a sculptural centrepiece. Light timber frames, rope detailing, and ivory upholstery give the chairs a warm, understated character.

Comfort & Function:

Padded seats, generous back cushions, and integrated armrests support relaxed dining. The central pedestal allows flexible chair placement, while the round tabletop encourages conversation.

Outdoor Performance:

For lasting outdoor use, weather-resistant upholstery, outdoor-grade rope, and table and timber finishes suited to sun and moisture exposure.

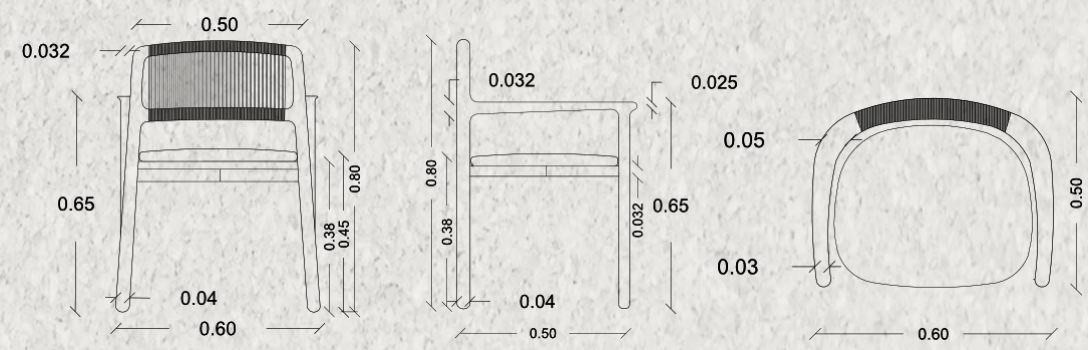

DINING CHAIR

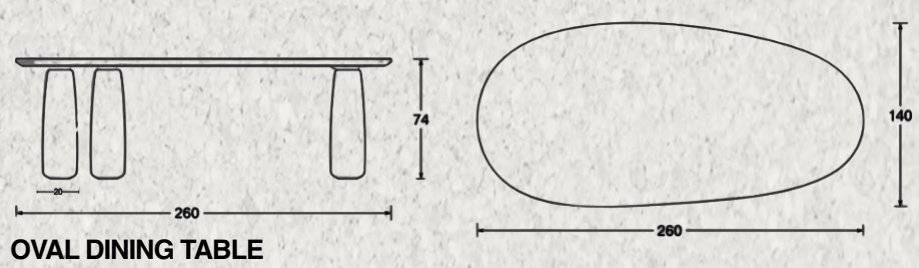

OVAL DINING TABLE

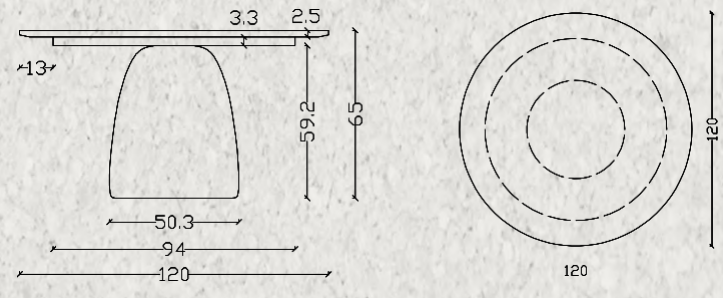

ROUND DINING TABLE

Designed By :
Mawazin Studio

توازُن

T A W A Z U N

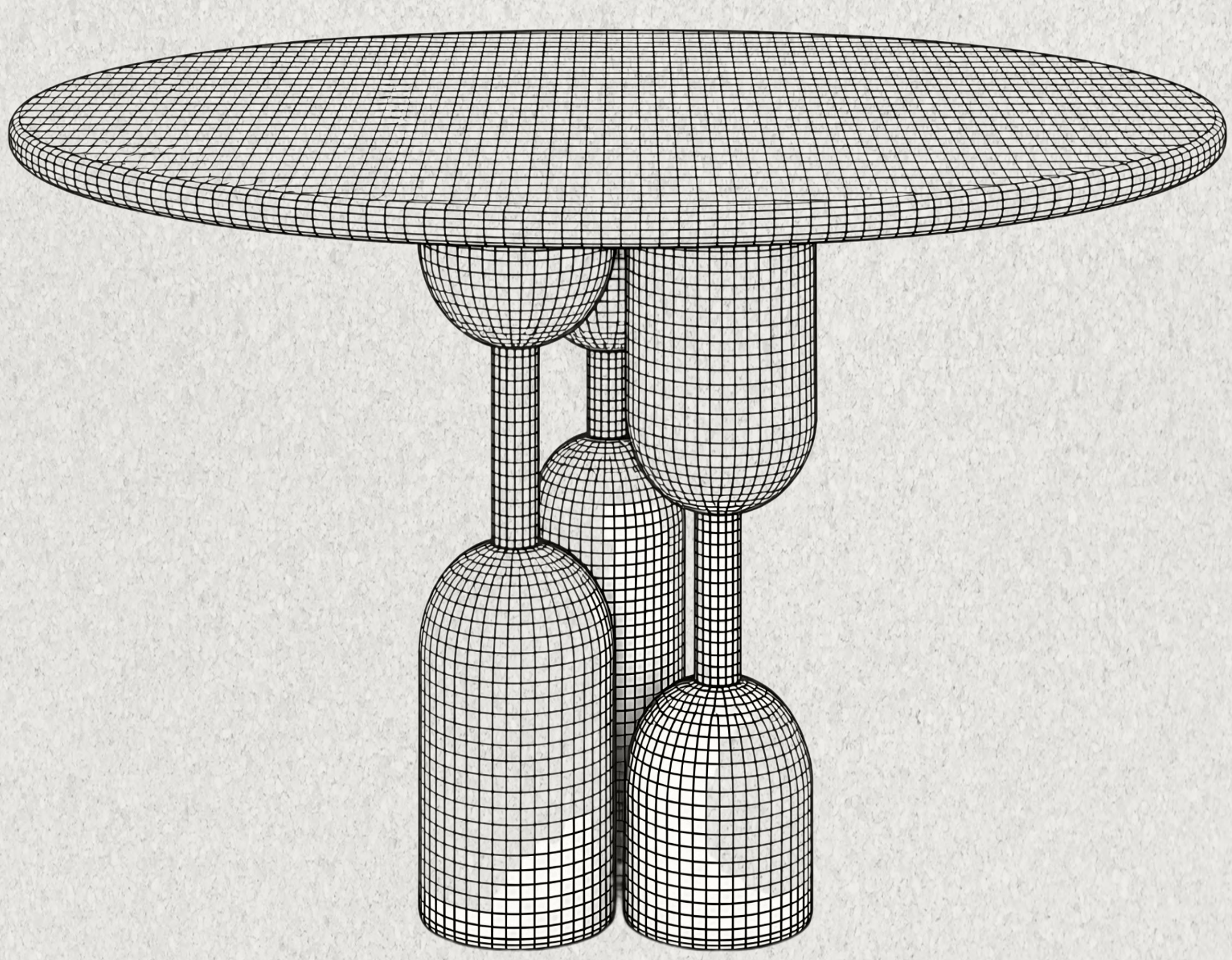

TAWAZUN Dining Table

A sculptural timber dining table featuring a slim oval top and a distinctive geometric pedestal.

Design Charachter:

Rounded timber volumes and slender vertical supports form an expressive base. Warm wood grain flows across the curved surfaces, complementing the softly rounded tabletop.

Comfort & Function:

The oval top provides a generous dining surface with smooth edges. A compact central base keeps the table perimeter open for chair placement.

Outdoor Performance:

For outdoor use, durable timber and protective finishes suited to sun and moisture exposure.

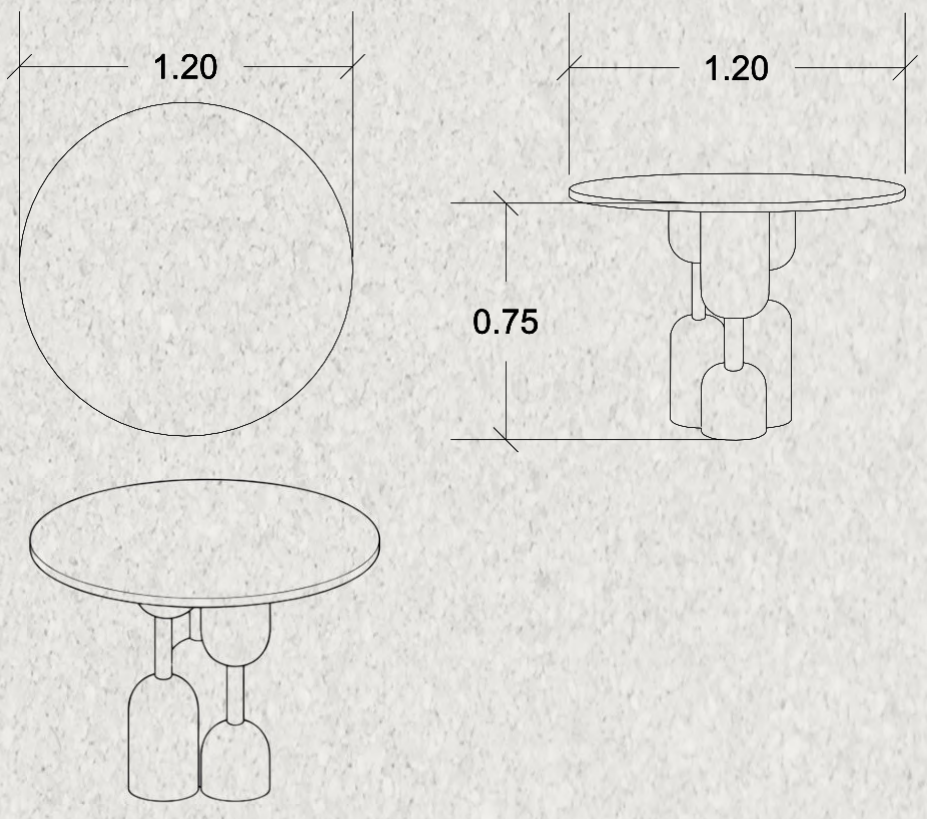

ROUND DINING TABLE

Designed By :
Mawazin Studio

مَدار

M A D A R



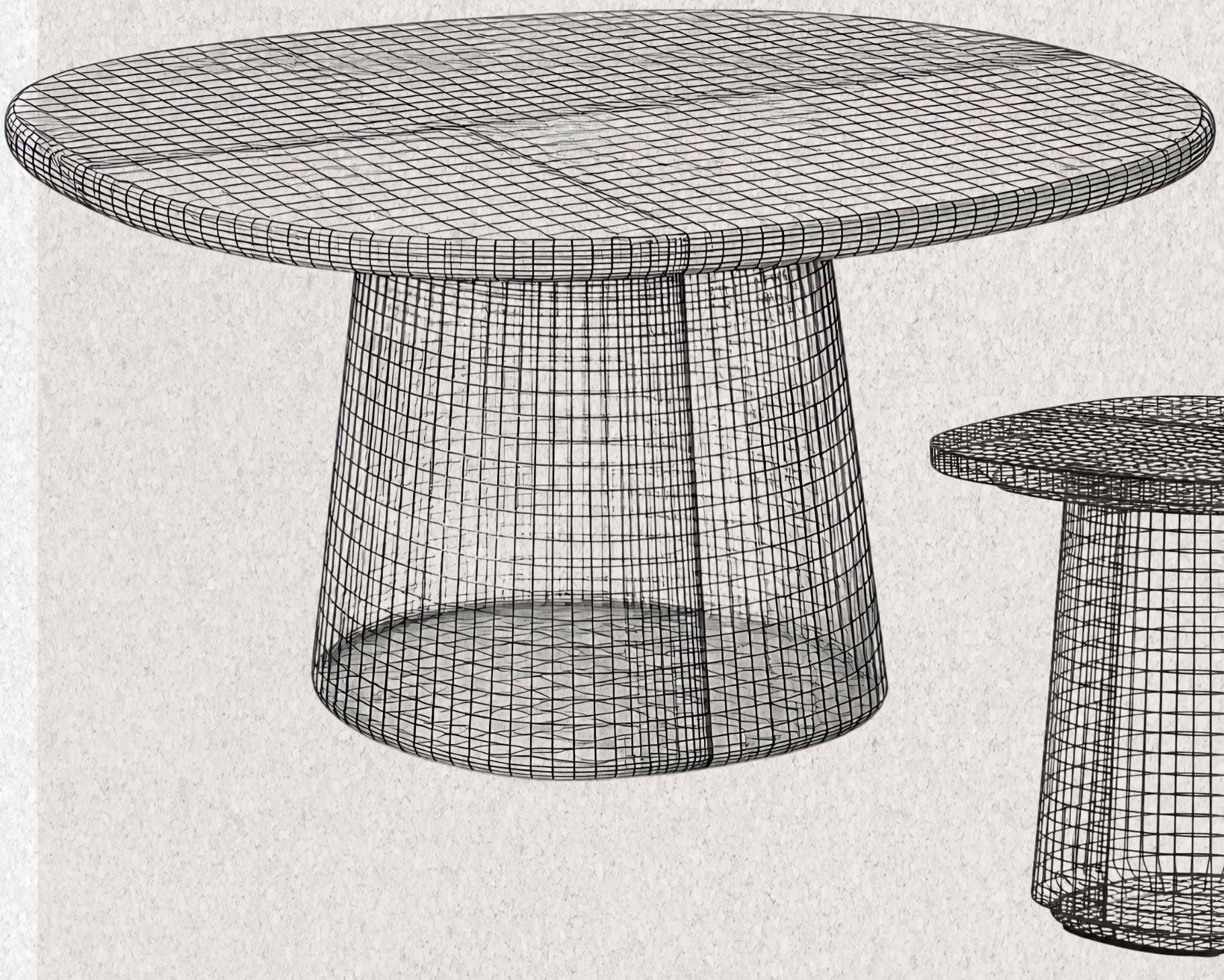

MADAR Dining Set

A coordinated pair of timber tables in two sizes, each with a rounded top and a tapered pedestal base.

Design Charachter:

Honey-toned and near-black wood finishes meet in a crisp line across each tabletop. The same contrast continues down the pedestal, accentuating its curved profile and visible grain.

Comfort & Function:

The larger table provides space for serving or display, while the smaller piece works as a side table. Their staggered heights allow them to be grouped or placed independently.

Outdoor Performance:

For outdoor use, durable timber and a protective finish that preserves the two-tone contrast under sun and moisture exposure.

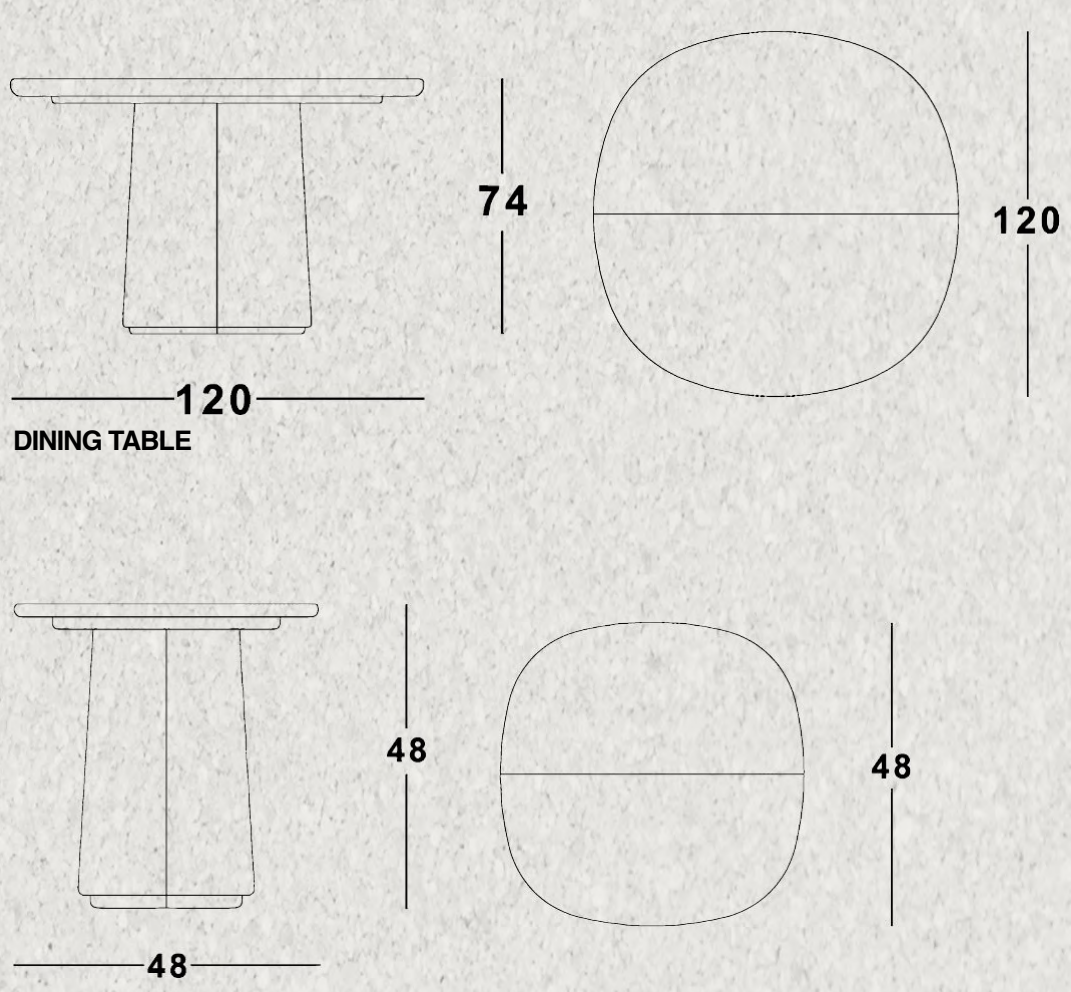

Designed By :
Cherif Morsi

وُجدان

W U J D A N



WUJDAN Dining Set

A coordinated timber dining set featuring a rectangular slatted table, six matching chairs, and a sideboard with woven doors.

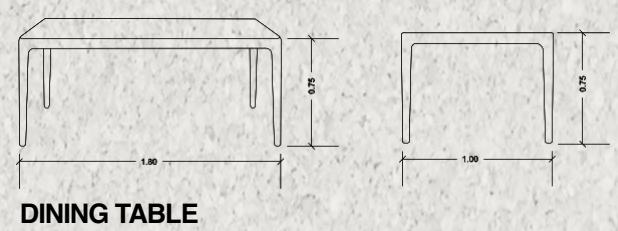

DINING TABLE

Design Charachter:

Warm wood tones unify the set. The tabletop's straight lines contrast with the chairs' curved backrests and gently shaped seats, while the sideboard's open weave adds texture.

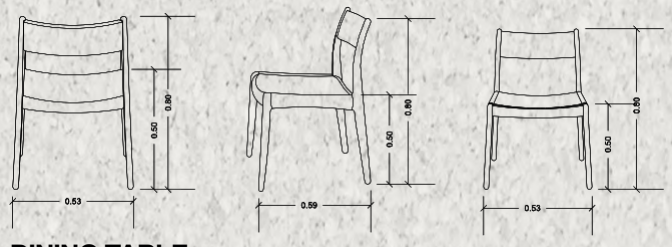

DINING TABLE

Comfort & Function:

The armless chairs tuck neatly under the table, leaving room to move around it. The sideboard keeps tableware close at hand and provides an extra surface for serving.

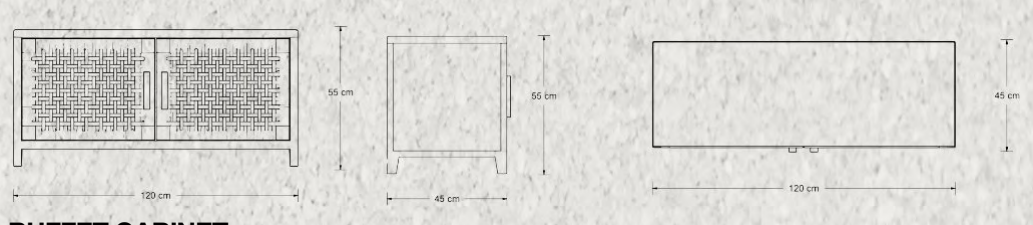

BUFFET CABINET

Outdoor Performance:

For outdoor use, durable timber, weather-resistant woven panels, and a protective finish suited to sun and moisture exposure.

Designed By :
Mawazin Studio

بَصمة

B A S S M A

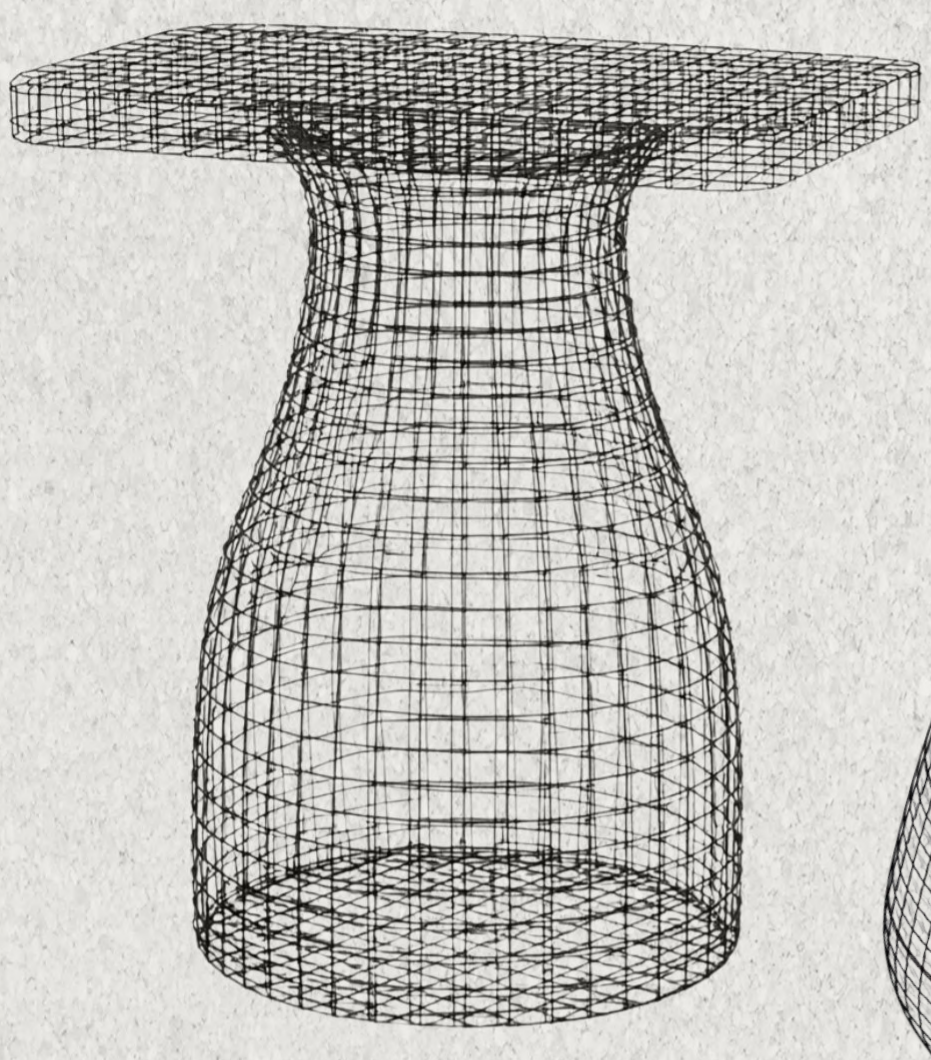

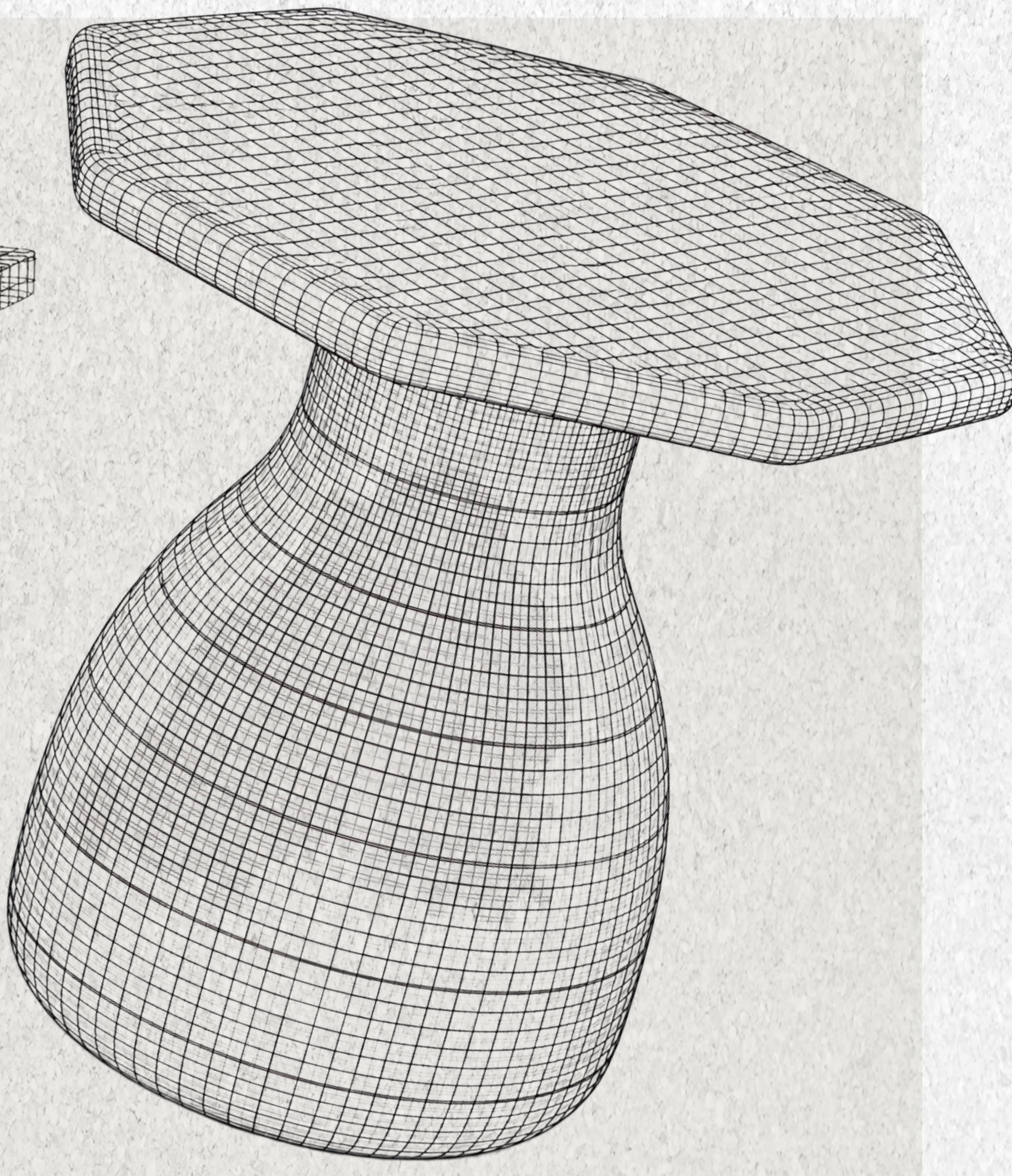

BASSMA Side Tables Set

A pair of sculptural timber side tables with slim, softly faceted tops and rounded pedestal bases.

Design Charachter:

Each base narrows beneath the tabletop and swells toward the floor, drawing attention to the flowing wood grain. A circular timber detail accents the front of the base.

Comfort & Function:

The tables can sit together as a pair or beside individual seats, keeping drinks and small items within reach.

Outdoor Performance:

For outdoor use, specify durable timber and an exterior finish suited to sun and moisture exposure.

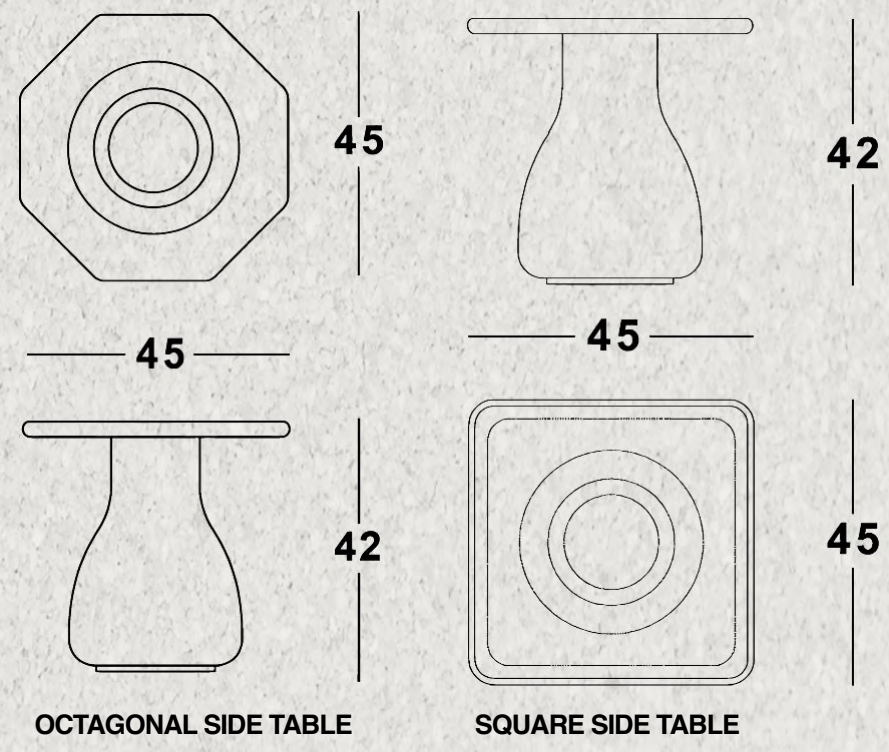

OCTAGONAL SIDE TABLE

SQUARE SIDE TABLE

Designed By :
Cherif Morsi

رَسیخ

R A S E E K H

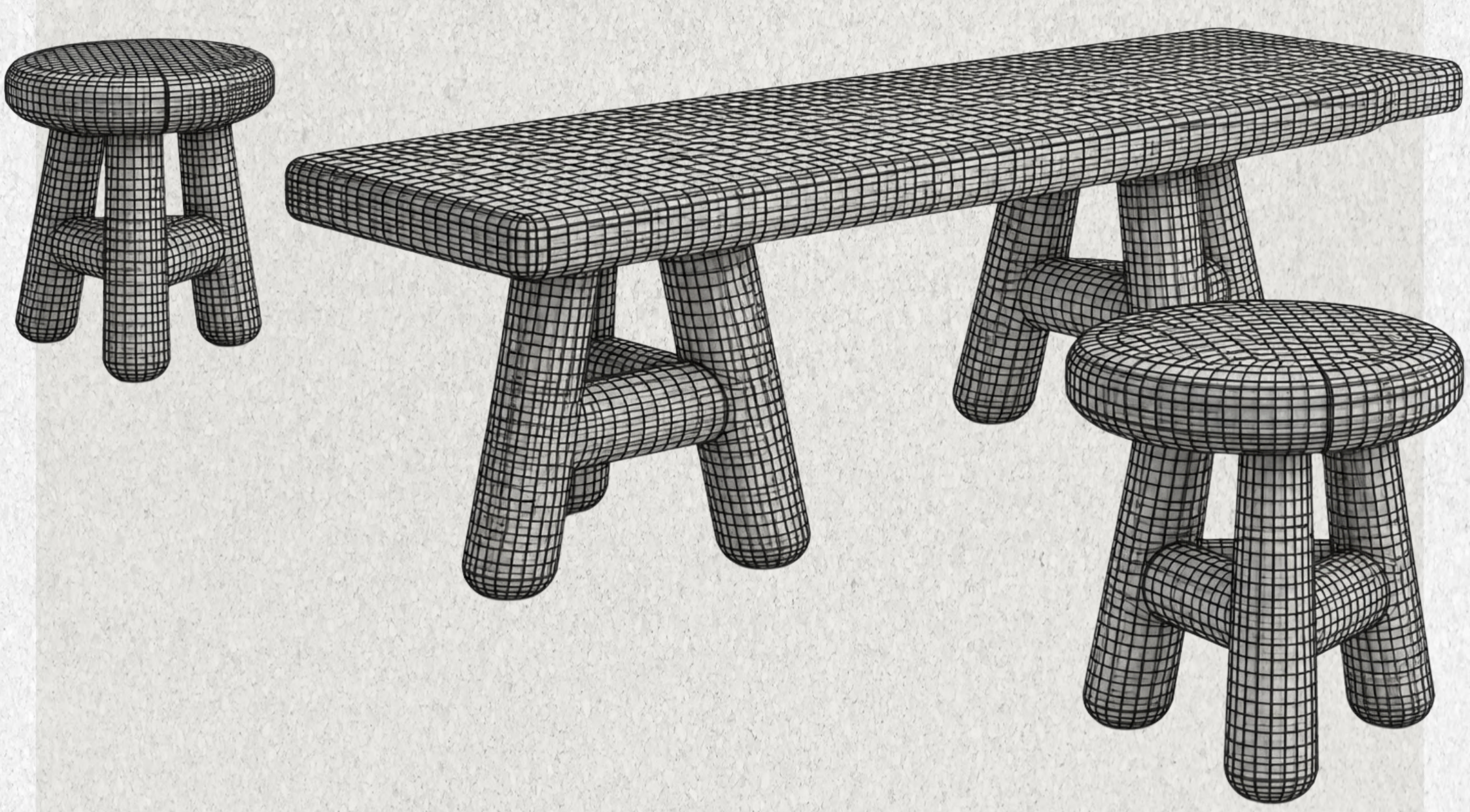

RASEEKH Set

A coordinated timber set featuring a low rectangular bench and two matching round stools.

Design Charachter:

Softly rounded edges, thick splayed legs, and cylindrical stretchers give the set a sculptural profile. Each stool pairs warm natural timber with a muted brown accent that continues from the seat down one leg.

Comfort & Function:

The bench provides shared seating or a low serving surface. The stools can sit alongside it for extra seating or serve individually as compact side tables.

Outdoor Performance:

For outdoor use, durable timber and exterior finishes suited to sun and moisture exposure.

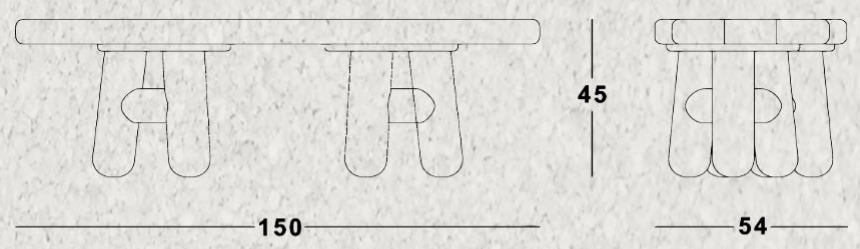

COFFEE TABLE

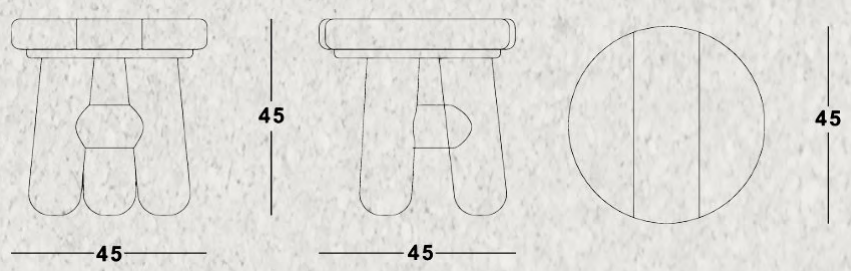

STOOL

Designed By :
Cherif Morsi


جذع
J E T H A E

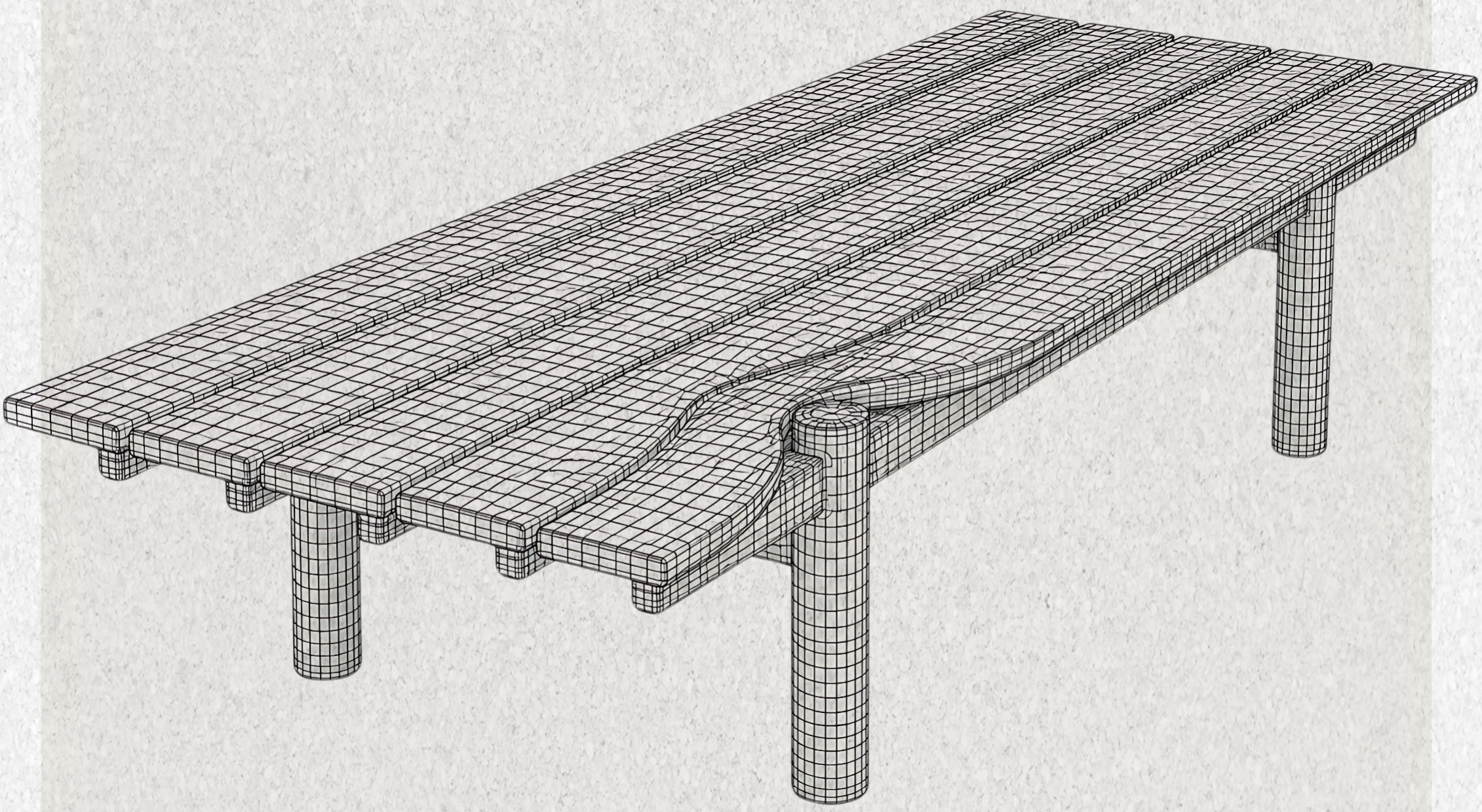

JETHEA Coffee Table

A pair of low timber coffee tables in contrasting light and dark finishes, designed to sit together or stand apart.

Design Charachter:

Parallel slats and round timber legs give both tables a clean, simple profile. Small rounded details along the adjoining edges draw attention to the seam where the two finishes meet.

Comfort & Function:

Place the tables side by side for a wider serving surface, or separate them to keep drinks and snacks within reach of different seats.

Outdoor Performance:

For outdoor use, durable timber and finishes suited to sun and moisture exposure.

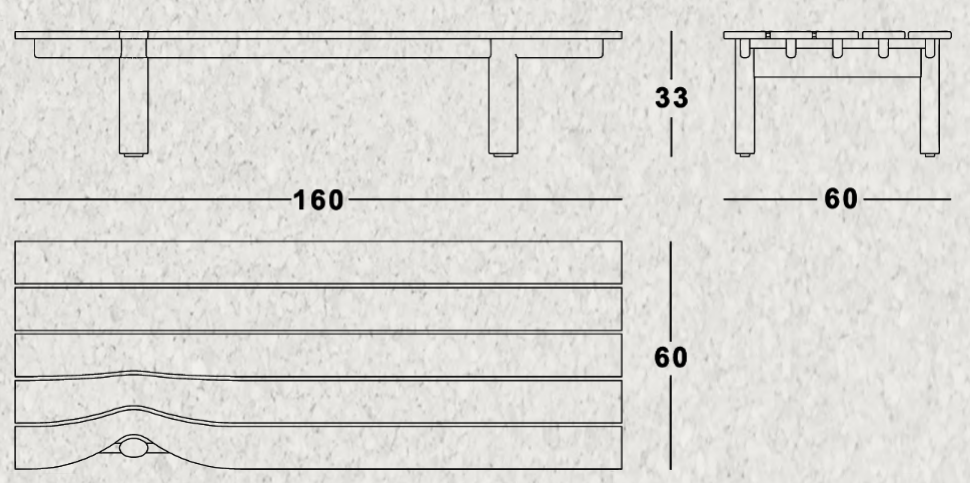

COFFEE TABLE

Designed By :
Cherif Morsi

ENHENA انهنا



ENHENAA Sunbed

a refined outdoor relaxation pieces, combining a flowing curved wooden frame with soft white cushioning for a calm and elegant lounging experience.

Design Charachter:

Sweeping timber legs give the sunbeds a sculptural profile. Full-length ivory cushions and matching bolster headrests contrast with the warm wood .

Comfort & Function:

Angled backrests and padded headrests support relaxed reclining.

Outdoor Performance:

For poolside use, quick-drying cushion fillings, weather-resistant upholstery, and a protective timber finish suited to sunlight and frequent splashes.

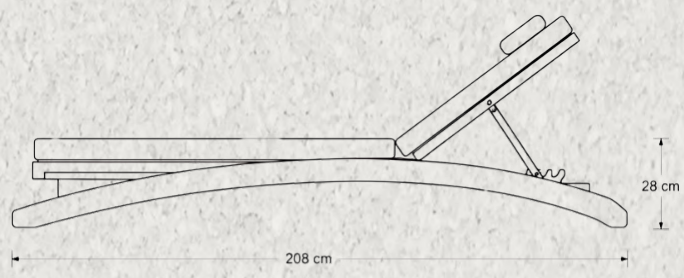

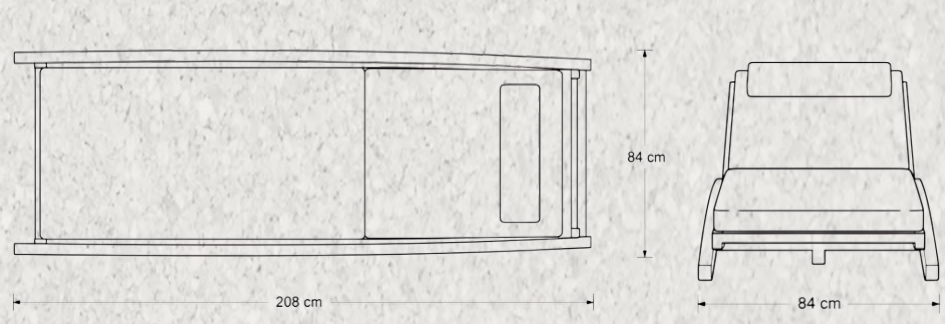

SUNBED

Designed By :

Abdrabboh Design House

بحر

B A H R

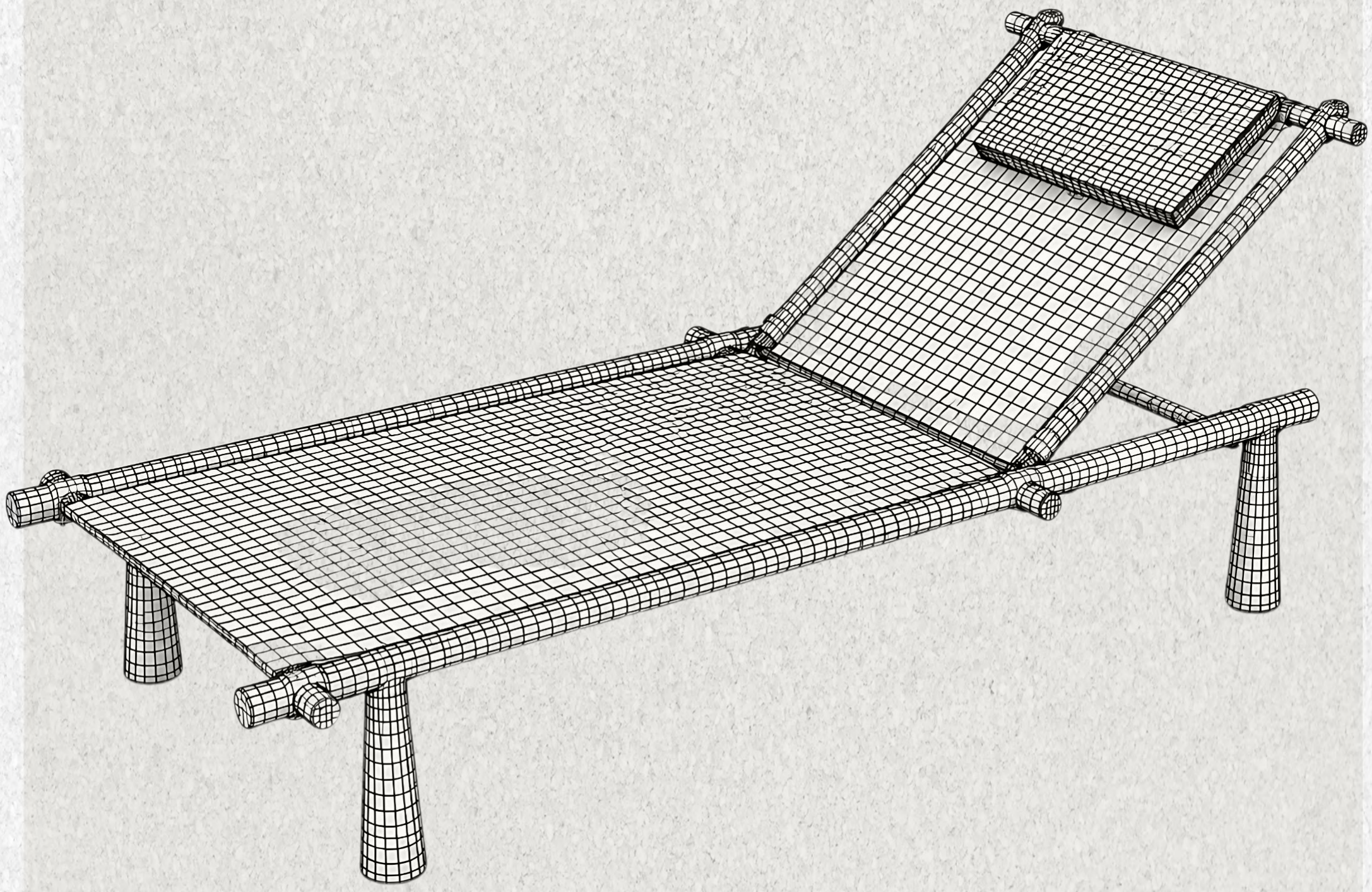

BAHR Sunbed

A pair of timber sling loungers in solid ivory and red-and-ivory stripes, with matching headrest cushions .

Design Charachter:

Rounded timber rails and visible cord lashings give the frames a handcrafted look. The bold stripes contrast with the plain ivory sling while keeping the same clean silhouette.

Comfort & Function:

Full-length fabric slings, angled backrests, and padded headrests support relaxed reclining.

Outdoor Performance:

For lasting outdoor use, quick-drying, UV-resistant sling fabric, outdoor-grade cord, and a timber finish suited to sun and moisture exposure.

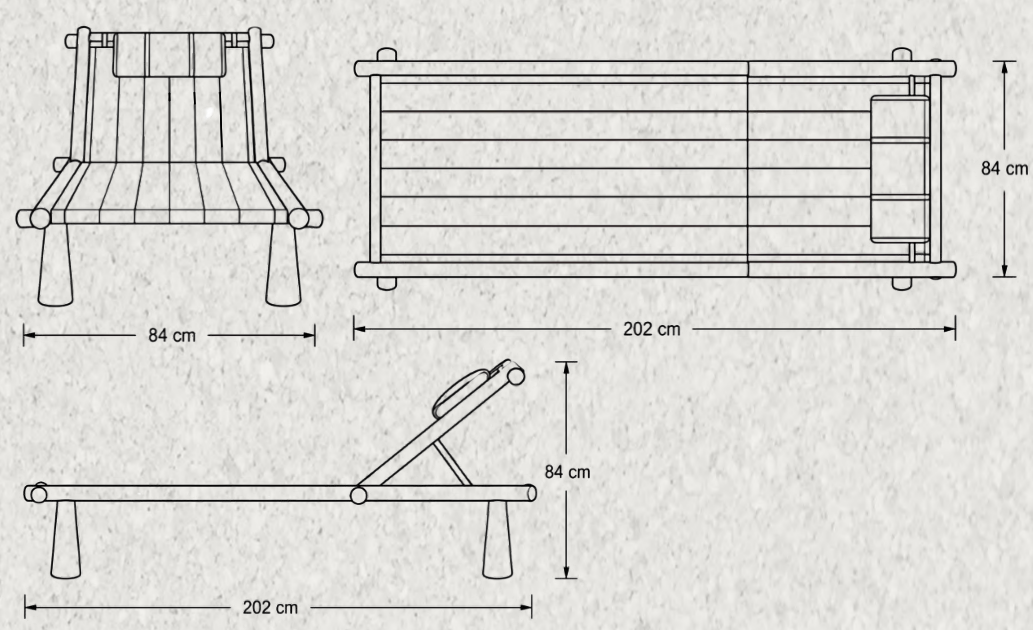

SUNBED

Designed By :

Abdrabboh Design House

کرسی بحر

B A H R

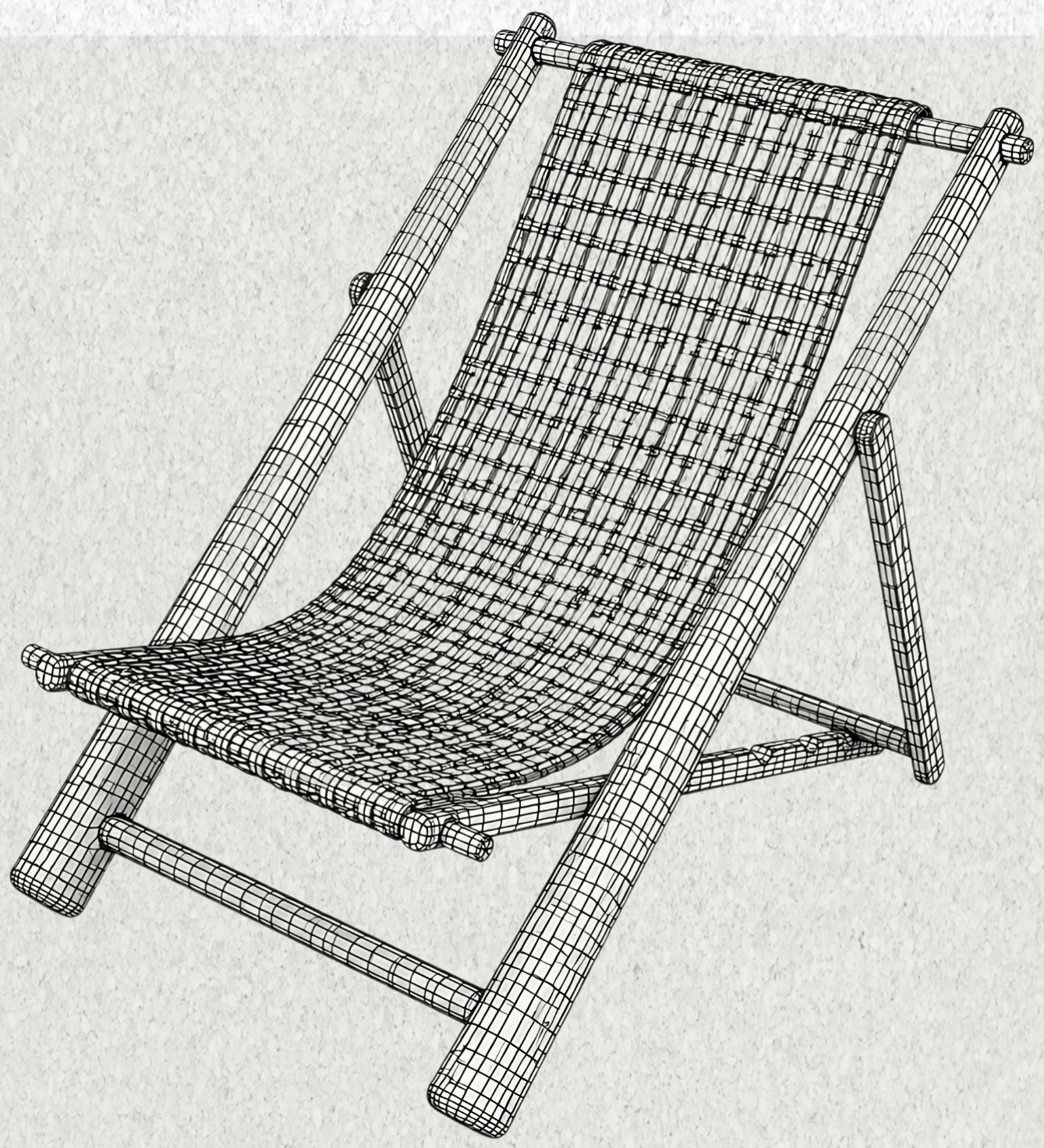

BAHR Beach Chair

A pair of timber sling loungers in solid ivory and red-and-ivory stripes, with matching headrest cushions .

Design Charachter:

Rounded timber rails and visible cord lashings give the frames a handcrafted look. The bold stripes contrast with the plain ivory sling while keeping the same clean silhouette.

Comfort & Function:

Full-length fabric slings, angled backrests, and padded headrests support relaxed reclining.

Outdoor Performance:

For lasting outdoor use, quick-drying, UV-resistant sling fabric, outdoor-grade cord, and a timber finish suited to sun and moisture exposure.

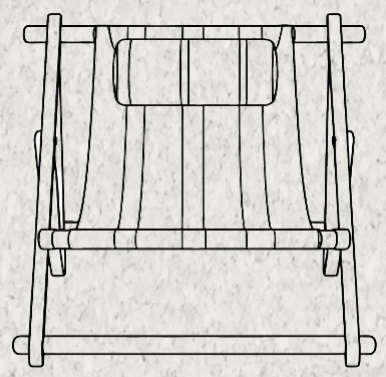

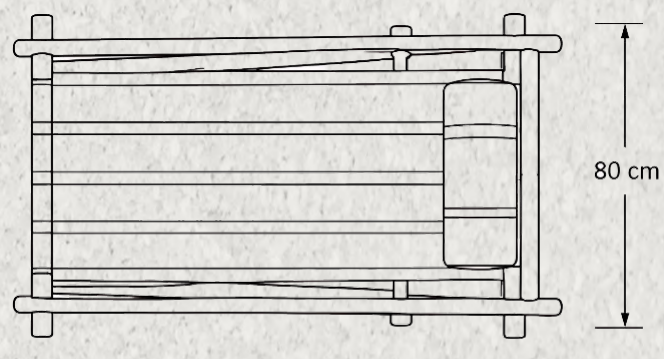

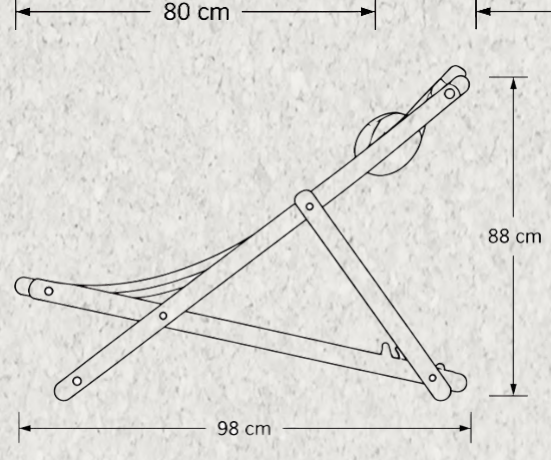

BEACH CHAIR

Designed By :

Abdrabboh Design House

رخا
RAKHAA

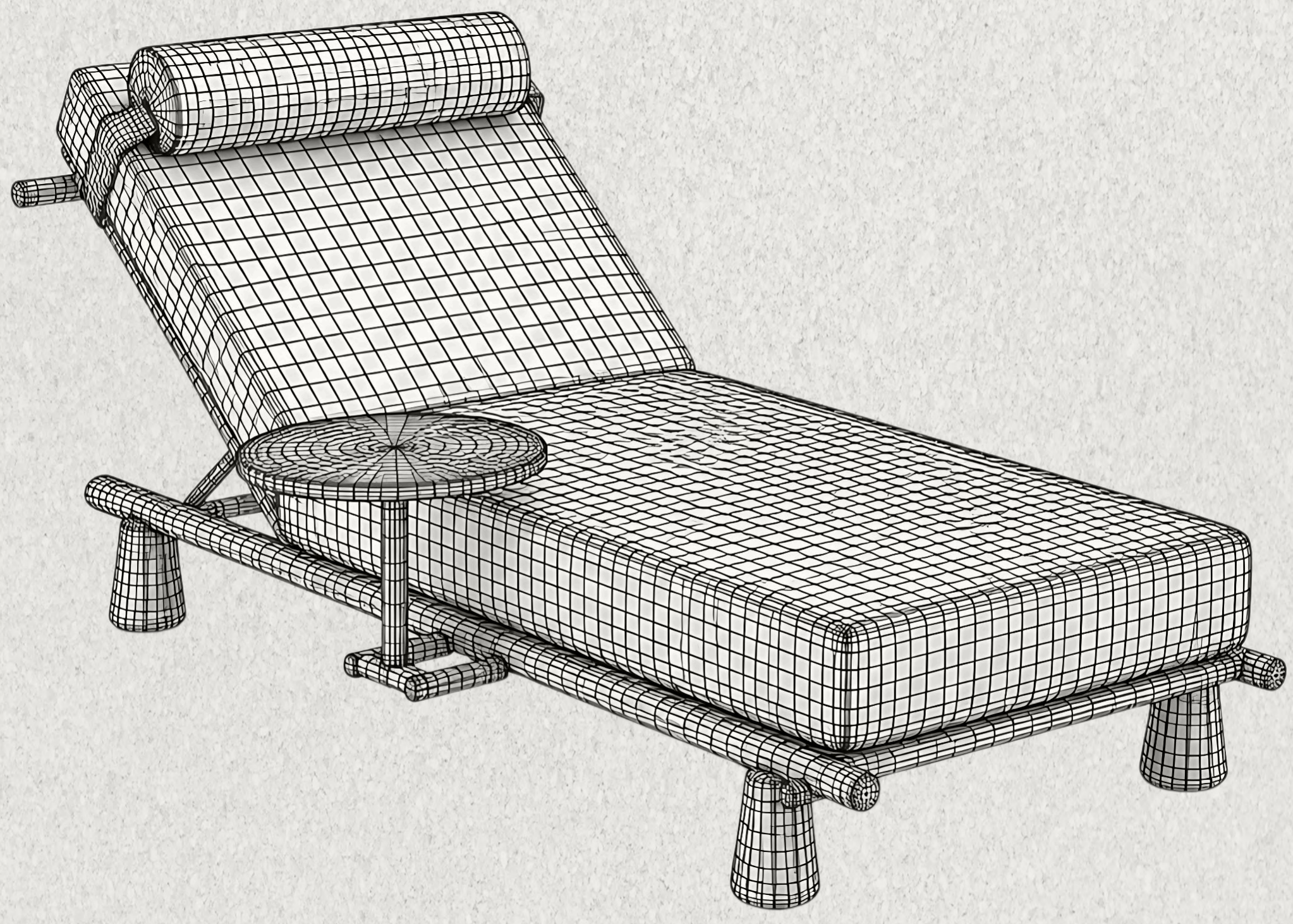

RAKHAA Sunbed

A low timber sun lounger with terracotta and ivory striped upholstery, paired with a compact round side table.

Design Charachter:

Bold stripes run along the seat and backrest and repeat on the cylindrical headrest. Rounded timber rails soften the frame, while the side table picks up the warm terracotta tone.

Comfort & Function:

The full-length cushion, angled backrest, and padded headrest support relaxed reclining. The side table keeps drinks and small essentials within reach.

Outdoor Performance:

For outdoor use, UV-resistant upholstery, quick-drying cushion filling, and exterior finishes suited to sun and moisture exposure.

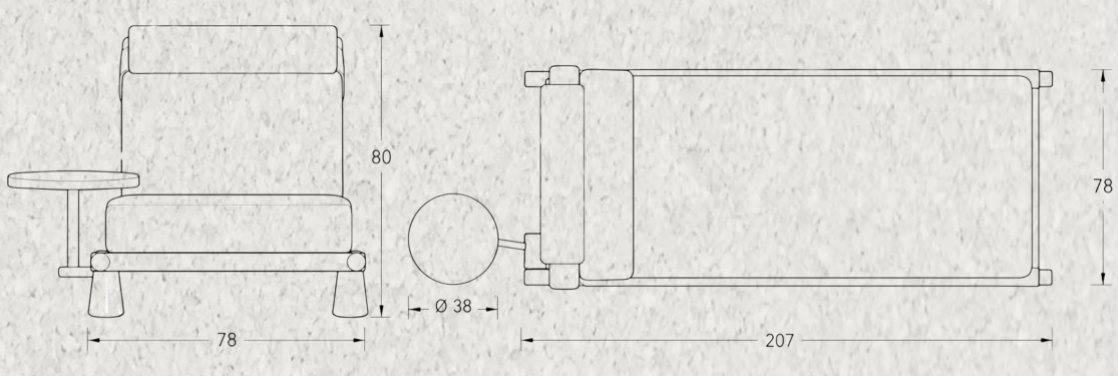

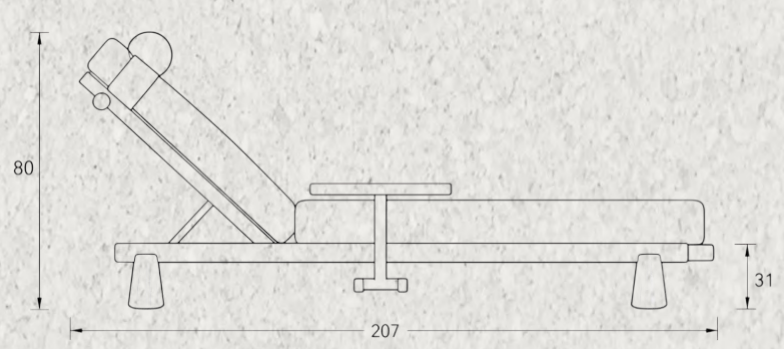

SUNBED

Designed By :

Abdrabboh Design House

نفس
NAFAS

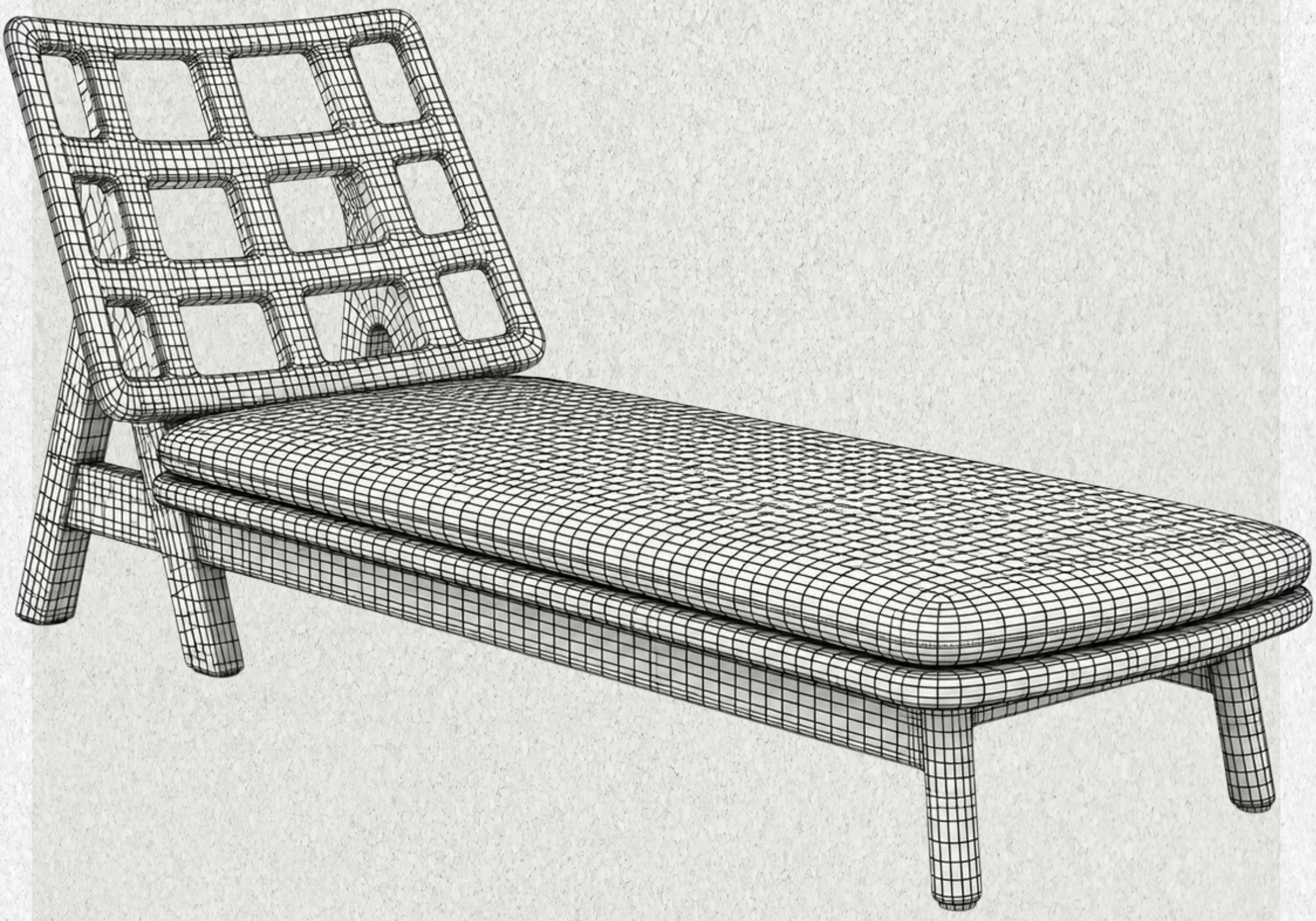

NAFAS Sunbed

A low-profile outdoor sunbed defined by clean horizontal lines and a grounded, architectural stance.

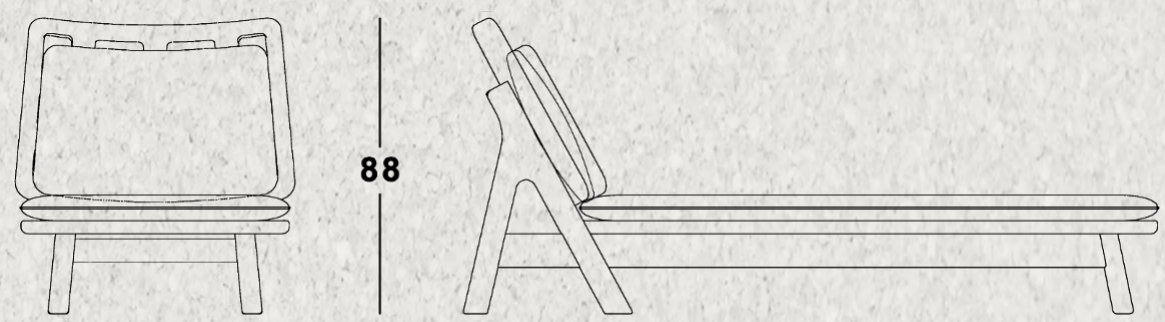

Design Charachter:

Rounded frames soften the grid of the backrests. Dark timber with oatmeal upholstery and honey-toned timber with burgundy upholstery give the loungers distinct palettes within a shared design.

Comfort & Function:

Full-length seat cushions and angled backrests support relaxed reclining.

Outdoor Performance:

For outdoor use, quick-drying cushion fillings, UV-resistant upholstery, and timber finishes suited to sun and moisture exposure.

Designed By :
Cherif Morsi

أُلفة

O L F A H

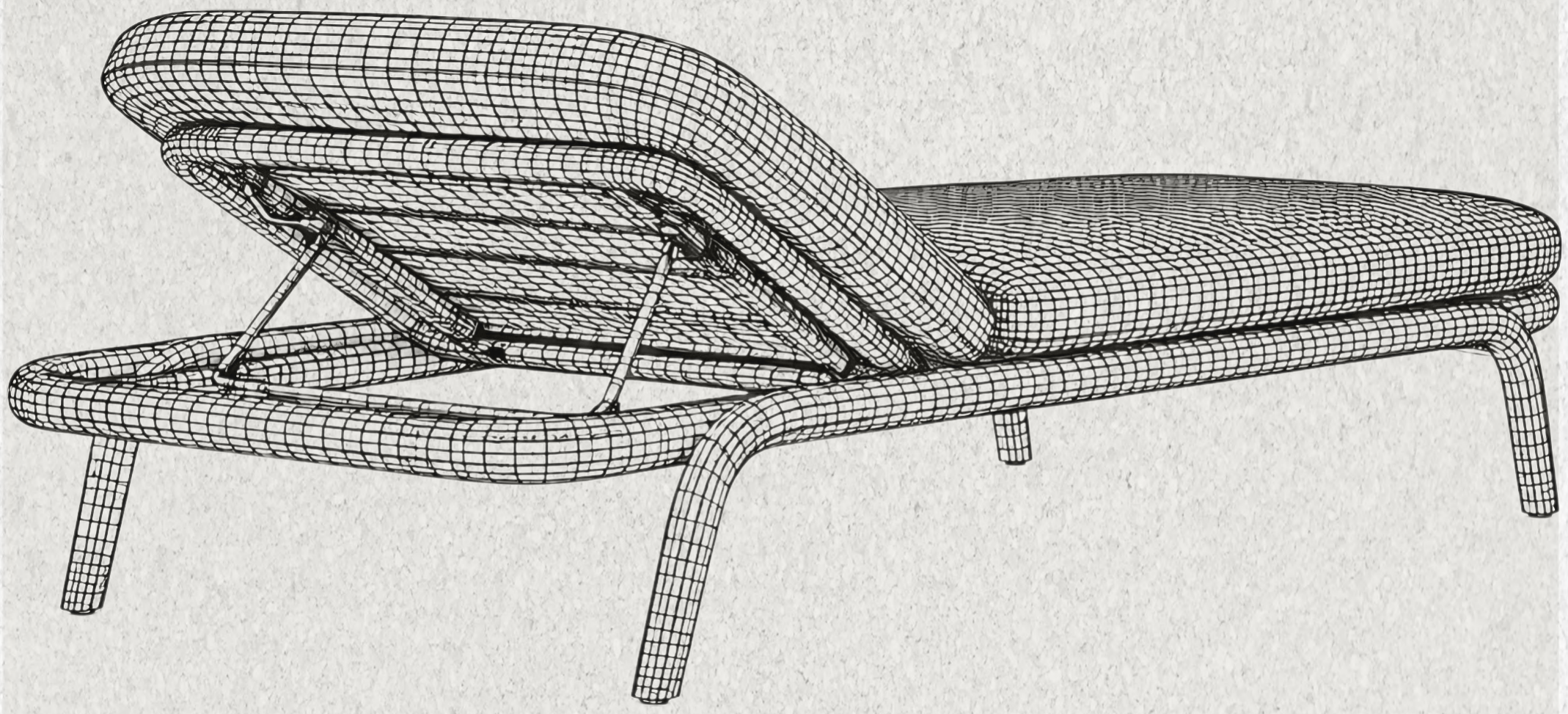

OLFAH Sunbed

sunbed is designed as a contemporary outdoor lounging piece that combines clean architectural lines with inviting comfort.

Designed By :
Attar X Mawazin Studio

Design Charachter:

A continuous timber rail curves around the foot of the lounger and flows into slender legs. The cushions follow the rounded frame .

Comfort & Function:

The raised backrest supports a reclined position for reading or resting, while the long seat cushion supports the legs.

Outdoor Performance:

For outdoor use, UV-resistant upholstery, quick-drying cushion fillings, and a protective timber finish suited to sun and moisture exposure.

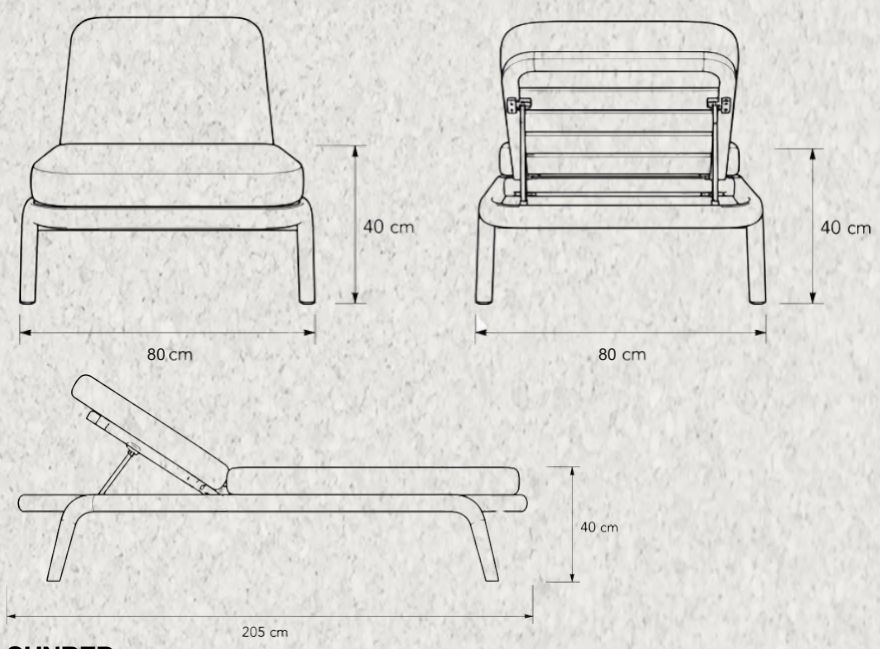

SUNBED

سجا

SUJA



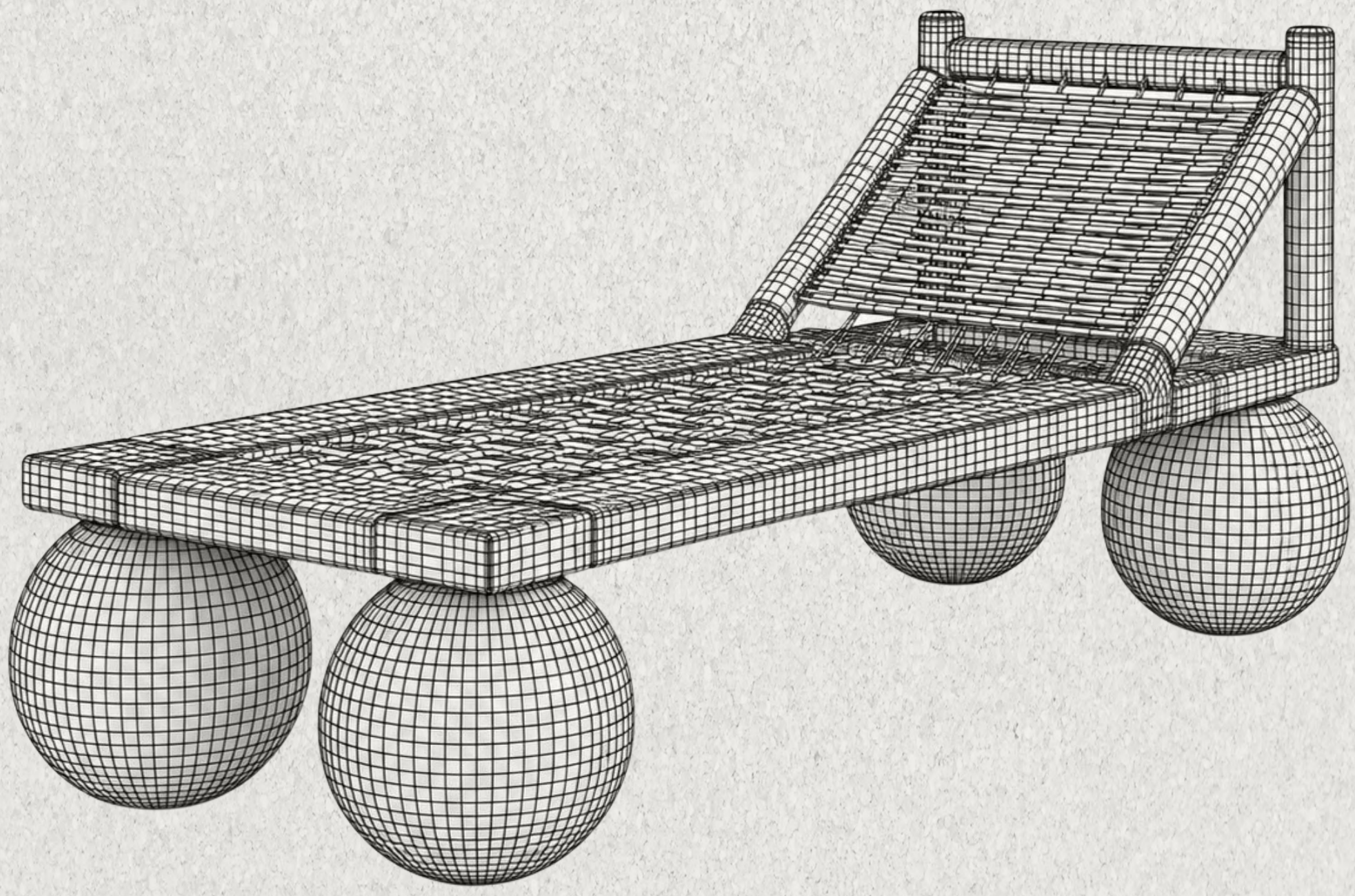

SUJA Sunbed

A low timber sun lounger with a woven rope deck, an inclined backrest, and oversized rounded feet.

Design Charachter:

A diagonal weave runs along the seat, while tightly spaced rope wraps define the backrest. The natural rope contrasts with the dark timber frame, and the rounded feet soften its straight lines.

Comfort & Function:

The full-length woven deck supports the legs, while the angled backrest holds the upper body in a relaxed reclining position.

Outdoor Performance:

For outdoor use, UV-resistant rope and a protective timber finish suited to sun and moisture exposure.

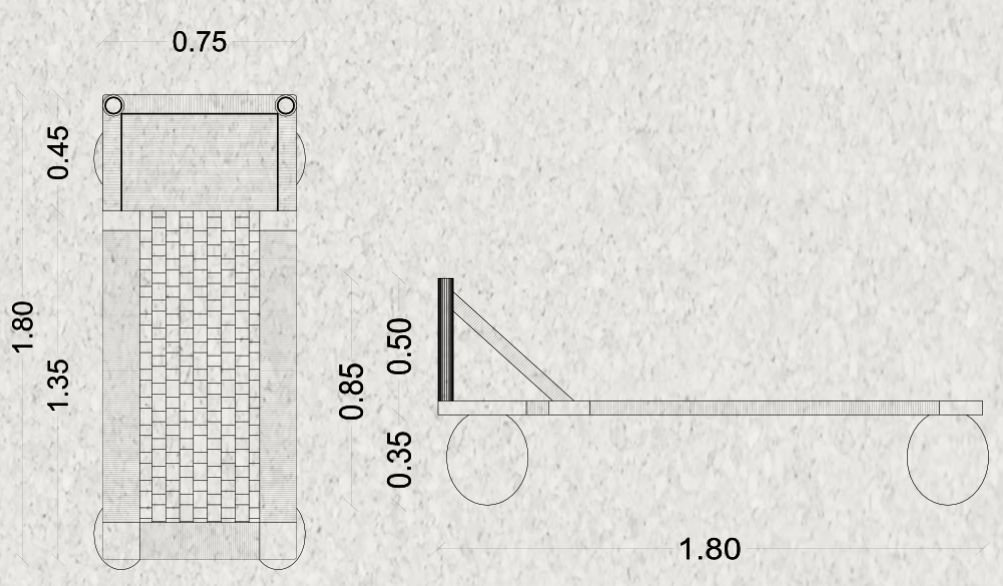

SUNBED


M A W J

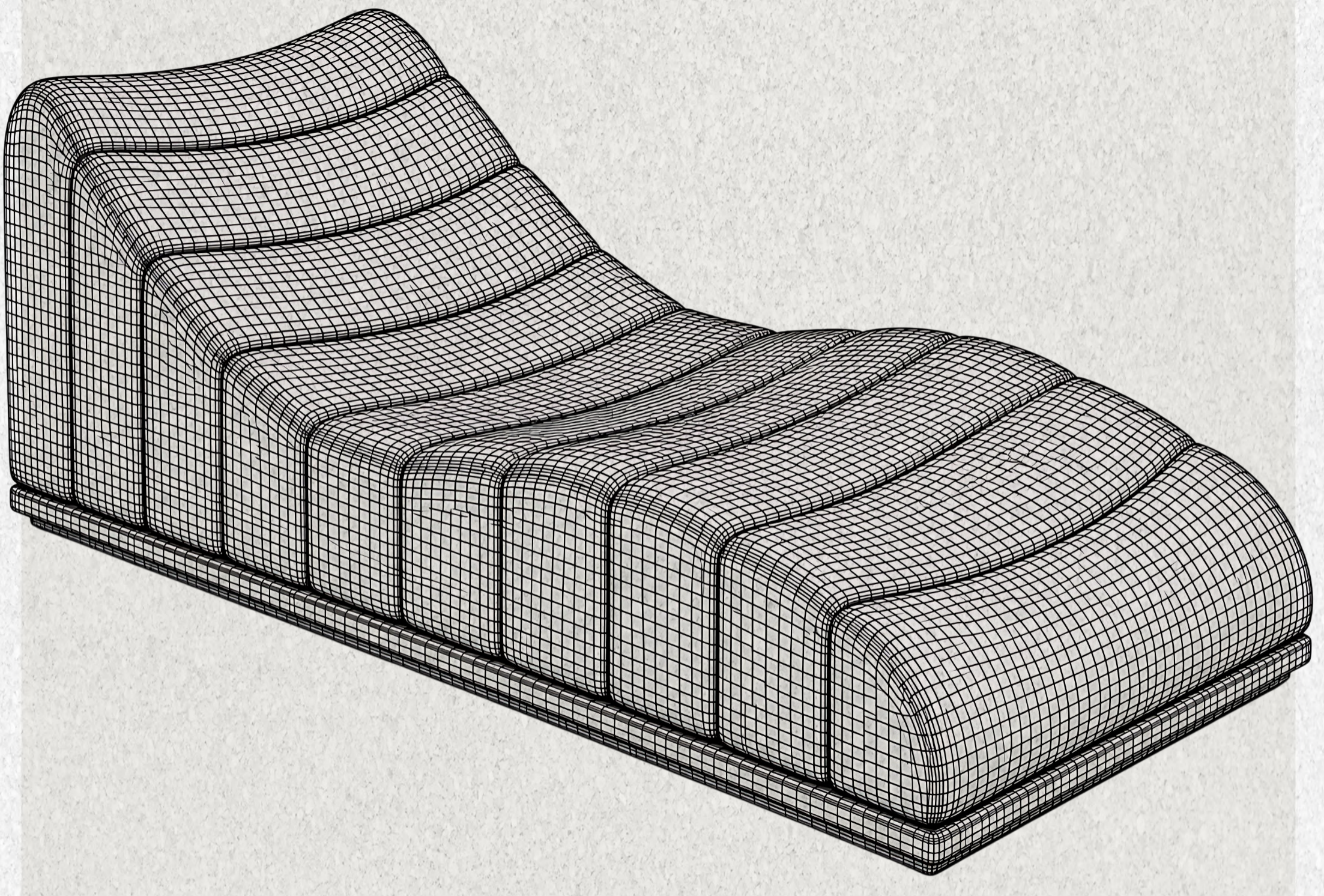

MAWJ Sunbed

culptural sun loungers in variety of colors , set on low timber wooden plinths.

Design Charachter:

a wave-like profile from the raised back to the rounded foot. Slim timber plinths give the wavy forms a crisp edge at floor level.

Comfort & Function:

The continuous padded surface supports the back and legs in a reclined position.

Outdoor Performance:

For outdoor use, UV-resistant foam , water resistent fillings, and a timber finish suited to sun and moisture exposure.

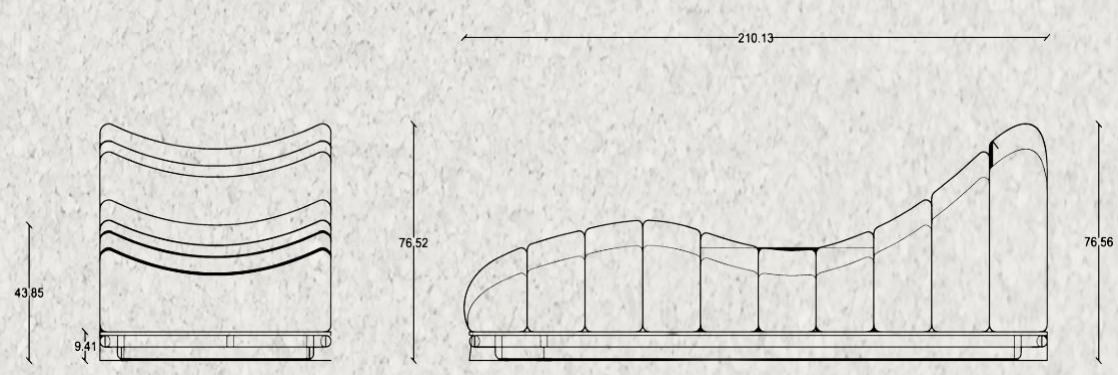

SUNBED

Designed By :

Nour Adel x Mawazin Studio

“The Maker

Awazin, is a brand built on balance between design and function, tradition and modern living, craftsmanship and clarity. We don’t see ourselves as manufacturers we see ourselves as makers. Every piece that leaves our hands carries a part of our process, our decisions, and our respect for material. We choose teak for its honesty, shape it with intention, and refine every detail until it feels balanced, natural, and right. What you receive is not just outdoor furniture, but something we’ve carefully built to live with you, age with you, and belong in its environment. This is our work, and this is how we stand behind it.

Every piece begins with intention and ends with presence. We design outdoor furniture not just to occupy space, but to create balance between material, environment, and human experience. Through carefully selected teak, hand-finished details, and honest construction, each product reflects a commitment to durability, comfort, and quiet elegance. Our work is rooted in craftsmanship and guided by proportion, ensuring that every form feels natural in its setting. This is not just furniture it is a considered extension of how you live outdoors.

This brand is my response to a world that moves too fast. Through mawazin, we slow down. We pay attention. We build with intention.

What you see here is the result of many minds and hands; designers, craftsmen, collaborators, all working with a shared devotion to balance and beauty.

Thank you for letting our work become part of your story.
Thank you for listening to the wood .



M. El-Attar

WWW.BYMAWAZIN.COM

feeling inspired

Step into our world of outdoor luxury at any moment and discover your ideal Mawāzīn setting.

CONTACT US

info@bymawazin.com

+20 111 245 3490
+966 55 129 9948

Main Office Cairo: Centrada Mall Zayed Unit DA202
Alexandria: 34 Hatem Mosque, Smouha St.
Riyadh: 7250 King Fahd Rd., Al Olaya District

WWW.BYMAWAZIN.COM

WWW.BYMAWAZIN.COM

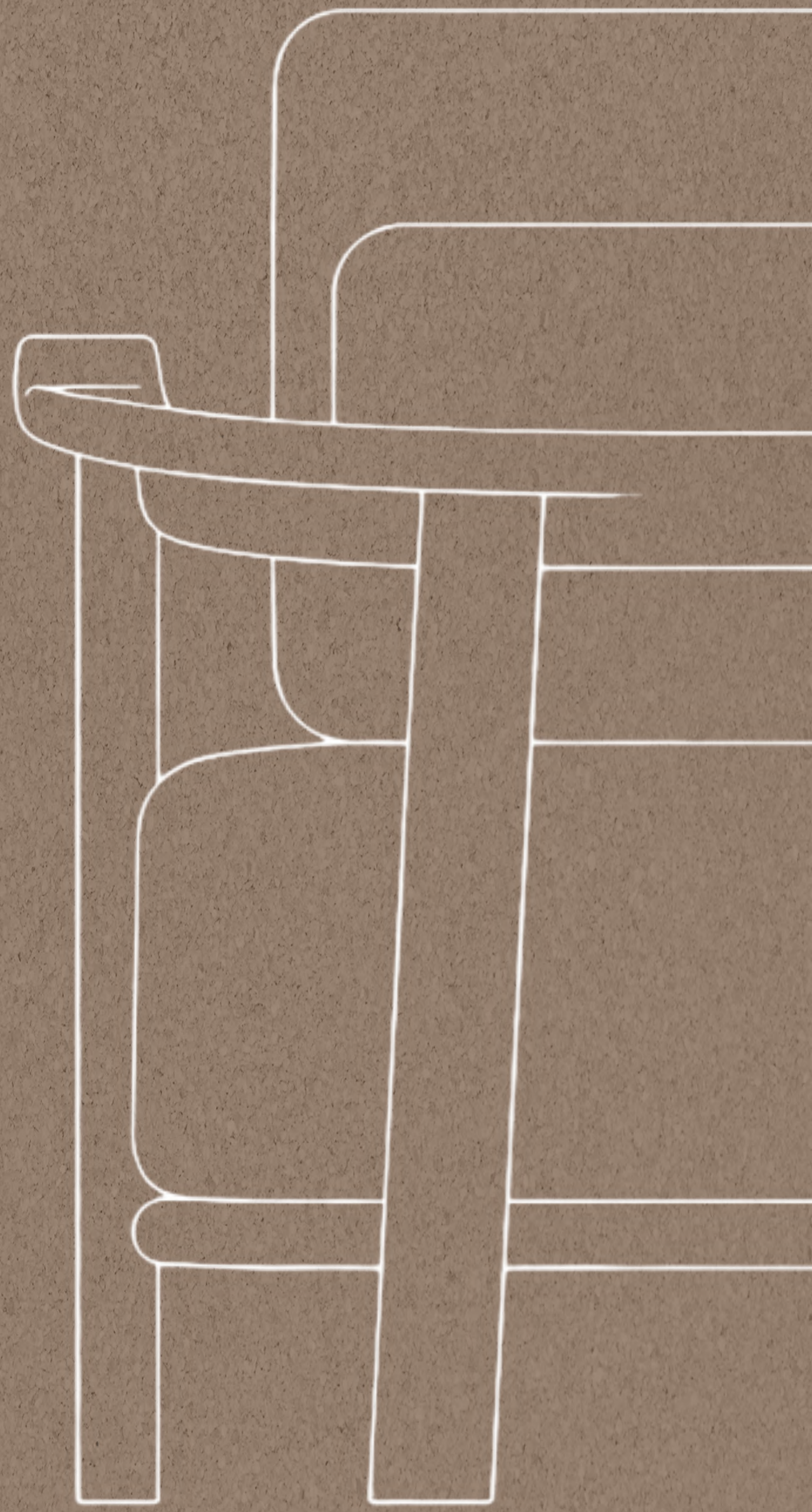

AI GENERATED.

WWW.BYMAWAZIN.COM

From Alexandria , Made with Love

صنع في مصر